INSTRUMENTS • CONTROLS • VALVES
CLICK TO VISIT OUR WEBSITE
ARCO Engineering, Inc.
SINCE 1954
www.arcoengineering.com
3317 Gilmore Industrial Blvd.
Louisville, KY 40213
Ph: (502) 966-3134
Fx: (502) 966-3135

Chromalox®

PRECISION HEAT AND CONTROL

The Right Products and Solutions for Your Applications

COLD WEATHER PRODUCTS

www.chromalox.com

Table of Contents

Comfort Heaters

Forced Air Heaters

Industrial

LUH	Horizontal Blower Heater	1
HVH	Horizontal or Vertical Blower Heater	5
KUH	Horizontal Blower Heater	11
UB	High Capacity Horizontal Blower Heater	15
VUH	Vertical Delivery Blower Heater	20

Harsh Environment

HD3D	Hose Down Corrosion Resistant Blower Heater	24
CXH-A	Explosion Proof Blower Heater for Hazardous Locations	27

Portable

DRA	Portable Industrial Blower Heater	34
HF	Portable Blower Heater	37

Commercial

CCH	Cabinet Console Blower Heater	38

Convection Heaters

Industrial

HCH	Wall Mounted Convection Heater	42
EH	Convection Heater Without Thermostat	45
HVT	Convection Heater With Thermostat	45
H	Horizontal Convection Heater	46
V	Vertical Convection Heater	47

Special Purpose

CPHH	Pump House Convection Heater	48
ICH	Institutional Convection Heater	49

Harsh Environment

CVEP	Explosion Proof Convection Heater	50
FPEP	Explosion Proof Convection Heater - Single Element	54
CEP-15	Explosion Proof Convection Heater - Dual Element	54

Architectural

CAF-6	Draft Barrier Convection Heater	55
CCAS-8	Slope Top Convection Heater	57
CCAS-12	Slope Top Convection Heater	59
CAF-12	Square Top Convection Heater	61
CAF-20	Cabinet Convection Heater	63

Radiant Heaters

Industrial/Commercial

STAR	ChromaStar Infra-Red Radiant Heaters	65
	Portable Radiant Heaters	66
	Fixed Radiant Heaters	67
	Accessories	68
RBC-1	Overhead Radiant Space Heater	71
RBC-3	Fixed Overhead Radiant Heater	73
UTUA-LT	.430" Dia. Round Cross- Section Tubular Replacement Element	75
SKR	Fixed Single Element Radiant Heater	76
KR	Fixed Single Element Radiant Heater	77

Thermostats & Controls

General Purpose

WR-80 / WR-90	Wall Thermostat	78

Hazardous Area

WR-80EP	Wall Thermostat	79

Commercial

WT	Wall Thermostat - Line Voltage	80
WTL	Wall Thermostat - Low Voltage	81

Hose Down

WCRT	Wall Thermostat	82

Heat Trace & Controls

Cable

Industrial

SRL	Self-Regulating Low Temperature Cable	83
SRM/E	Self-Regulating Medium Temperature Cable	86
CWM	Constant Wattage Medium Temperature Cable	89
MI	Mineral Insulated High Temperature Cable	92

Hazardous Area

HSRL	Self-Regulating Low Temperature Cable	96
HSRM	Self-Regulating Medium Temperature Cable	99

Commercial

SRF	Self-Regulating Freeze Protection Cable & Accessories	102
SRF-RG	Self-Regulating Roof & Gutter Cable Accessories	107
New! Edge-Cutter	Roof De-Icing System	109

Snow Melting Controls

APS-4	Automatic Snow and Ice Melting System Controller	111
SC-40	Satellite Contactor	112
GIT-4	Gutter Ice Melting Controller	113
CIT-1	Snow Sensor	114
LCD-1	Snow Switch	115
SIT-6E	Pavement Sensor	116
RCU-1	Remote Control Unit	117

Connection Accessories

New! U Series	Heat Trace Connection System Accessories	118
DL & EL	Connection Accessories	122
DL	Integrated Connection Accessories	123
EL	Standard Connection Accessories	127
DL & EL	General Application Accessories	129
HL	Hazardous Location Connection Kits	130

Thermostats

B100 & E100	Freeze Protection Thermostats	132
RBF	Heat Trace or Pipe Sensor	134

Controls

DL	Integrated Temperature Controls	135
HTLS	Single-Loop Line Sensing Control Panel	138
HTLS	Dual-Loop Line Sensing Control Panel	140
HTLS	Three-Loop Line Sensing Control Panel	142
HTLS	Four-Loop Line Sensing Control Panel	143
HTLSC1D2	Series C1D2 Line Sensing Control Panels	144
HTLS	Multi-Loop Line Sensing Control Panels	146
HTAS	Multi-Loop Ambient Sensing Control Panels	150
FPAS, FPLS, FPASM, FPLSM	Freeze Protection Heat Trace Panels	154

Heaters

PHD & PHDT	Heavy Duty Fiberglass Woven Drum Heater	164
IBG	Flexible Thermal Drum Insulation Blanket Heater	165
SL-B	Silicone Rubber Insulated Enclosure & Air Heater	166
SLDH	Silicone Rubber Insulated Drum Heater	167

Technical Section

Comfort Heating Products

Heat Transfer Fundamentals & Thermodynamic Properties 169
Determining Heat Energy Requirements 170
General Industrial Sizing Guide 172
Typical Outside Deisgn Temperatures for the US 173
Radiant Infrared Heating- Comfort Heating 178
Watt Density for Typical Applications vs. Temperature Rise 179
Snow Control Design Guidelines 179
Reflector Tables for Infrared Heaters 180

Heat Tracing Products

Application & Selection Guidelines 185
Determining Heat Energy Requirements 189

General Technical Information

Properties of Steam 193
Electrical Fundamentals & Three Phase Calculations 194
Three Phase Equations & Heater Wiring Diagrams 195
Wiring Practices for Electric Heaters 196

Reference Data

Pressure-Temperature Ratings of Common Flange Materials 198
Physical & Thermodynamic Properties of Common Liquids 199
Physical & Thermodynamic Properties of Common Solids 200
Equivalents & Conversions 202
Engineering Constants & Conversions 203
NEMA Enclosures, Hazardous Location Heaters, Electric Heater Applications 204
Terms of Sales & Warranty Information 209

Index 213

LUH
Horizontal Blower Heater

- **2.6 - 45 kW**
- **8,900 - 153,000 Btuh**
- **208, 240, 277, 480 and 600 Volt**
- **1 or 3 Phase**
- **Wall or Ceiling Mounted Configurations**

Description

Type LUH self-contained heater provides quiet, reliable fan-forced heating in all types of commercial and industrial applications.

Applications

- Shipping and Receiving Areas
- Pump Houses
- Power Generating Stations
- Aircraft Hangers
- Factories
- Warehouses
- Garages

Construction

Die Formed Cabinet — Heavy 18 gauge steel, phosphate undercoated for corrosion resistance and finished in almond polyester powder coat.

Louvers — Individually adjustable louvers direct air flow up or down as needed.

Fintube Heating Elements have corrosion resistant steel fins that are furnace brazed to the tubular element to assure long life and superior heat transfer.

Fan Motor — Totally enclosed fan motor is rated for continuous duty with built-in thermal cutout and operates on same voltage as the heating circuit.

Dynamically Balanced Fan is attached with rubber vibration insulators for smooth, quiet operation. Blade pitch is carefully selected so that the volume of air moved results in the optimum discharge air temperature.

Features

- **Sub-divided Circuits with Individual Fuse Protection —** Standard on all heaters with a total current draw of 48 Amps or greater. The fuse compartment is conveniently located for easy access.
- **Integral 120V Control Transformer —** Standard on 480V models, eliminates the need for an external control source (24V optional).
- **Heavy Duty Magnetic Contactors** are standard on all models.
- **Thermal Cutouts** open the control circuit and disconnect power to the heating elements if overheating occurs. **Automatic Reset** allows the control circuit to reclose and restore power when temperature returns to normal.
- **Field Convertible —** Combination 208/240V and 1 or 3 phase operation through 10 kW.
- **Mounting Configurations —** Recessed welded fasteners on top of the heater cabinet are internally threaded for suspension of unit with threaded rods. Ceiling and Universal Wall Swivel brackets are optional. The ceiling bracket lets you mount heater directly to ceiling or over-head member, simply and easily. The swivel mounting allows you to readily adjust the direction of warm air flow for maximum comfort up to 180 degrees.

Optional Features (Factory Installed or Field Installation Kits)

- **Summer Fan Switch Kit —** Field installable for circulating warm stratified air. Available for all models.
- **Thermostat Kit —** Field installable on all models. Range 40°F - 90°F.
- **Power Disconnect Kit —** Field installable switch enables power to be disconnected while servicing heater. 40, 80 and 100 Amp models available. Mounts in the back of the heater.
- **Ceiling Bracket** (shown above)
- **Wall Mounting Bracket**

Advantages

- Self Contained
- Versatile, Flexible and High Performance
- Easy Installation
- Minimum Maintenance
- Long Life
- Attractive Appearance

Because it has individually adjustable discharge louvers to direct air flow, and can be wall or ceiling (plus swivel) mounted, the LUH heater may be used in a variety of heating applications:

- Primary Heating
- Supplementary Heating
- Dual System Heating
- Spot Heating
- Entryway Air-Curtain Heating

Refer to WR-80, RTC, WR-90 in the Controls section.

LUH

Horizontal Blower Heater *(cont'd.)*

Dimensions (Inches)

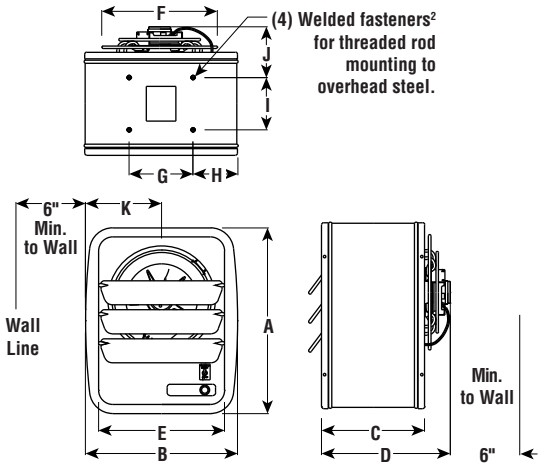

Wall Mounted Universal Bracket

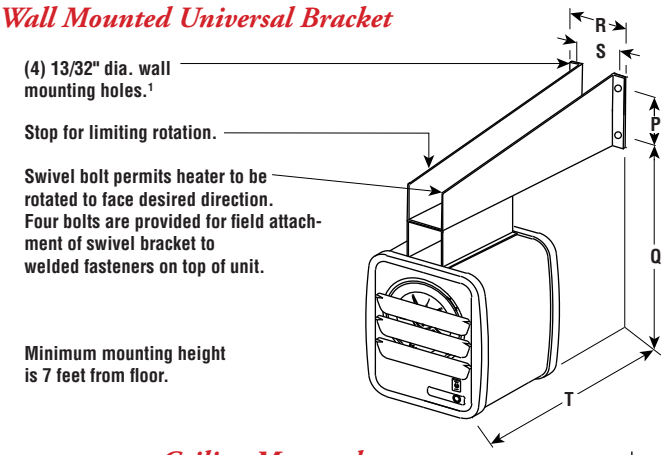

Ceiling Mounted

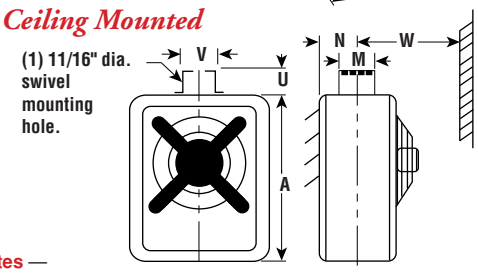

Notes —
1. Wall mounting fasteners to be supplied by customer.
2. Threaded rod to be supplied by customer.

Wall Mounted Heaters

Heater	Dimensions (In.) P	Q	R	S	T	Wall Bracket	PCN	Stock	Wt. (Lbs.)
LUH-02 to -05	1-3/4	21-1/2	6-3/4	5-1/2	14-15/16	**WUH-01A**	**303474**	**S**	3
LUH-07, 10, 12, 15	2	28-7/16	9-1/2	8-3/8	22-1/4	**WUH-02**	**300484**	**S**	5
LUH-20, 25	2	32	9-1/2	8-3/8	22-1/4	**WUH-02**	**300484**	**S**	7
LUH-30, 35, 40, 45	5-1/2	28-11/16	5	3-1/2	33-1/4	**WUH-03**	**300492**	**S**	10

Ceiling Mounted Heaters

Heater	Dimensions (In.) A	B	C	D	E	F	G	H	I	J	K	M	N	U	V	W	Ceiling Bracket	PCN	Stock	Wt. (Lbs.)
LUH-02 to -05	16	13-1/8	8-7/8	11-5/8	10-3/4	9-3/4	5-1/2	3-13/16	4-1/2	4-15/16	6-5/8	6	4-7/16	4	4-1/2	10-1/2	**WUH-04A**	**303466**	**S**	1
LUH-07, 10, 12, 15	20-1/2	17-1/4	11-1/2	16-3/8	14-3/8	12-3/8	8-1/4	4-1/2	6-1/4	7-7/16	8-5/8	8	6-1/4	6	7-1/4	16	**WUH-05**	**300513**	**S**	2
LUH-20, 25	24	20-1/8	11-1/2	20-1/2	16-3/4	16	8-1/4	6	6-1/4	12	10-1/16	8	6-1/4	6	7-1/4	16	**WUH-05**	**300513**	**S**	3
LUH-30, 35, 40, 45	24	20-1/8	17	26	16-3/4	16	8-1/4	6	11-3/4	12	10-1/16	13-3/4	9-5/16	6	7-1/4	21	**WUH-06**	**300521**	**S**	3

Optional Control Accessories & Remote Thermostats
Fan Only Operation Kits

Summer Fan Switch

Thermostat Kit

Note — A fan only operation (optional) is available by means of a built-in switch or by external control.

Summer Fan Switch	(2 - 15 kW) Model	PCN	(20 - 45 kW) Model	PCN	Stock	Wt. (Lbs.)
Internal 208 - 277V	ISFS-02[2]	305007	**ISFS-02**	**305007**	**S**	0.25
External[1] with Relay (24V control)	ESFS-40	305015	**ESFS-40A**	**305058**	**S**	0.5
External[1] with Relay (120V control)	ESFS-41	305023	**ESFS-41A**	**305066**	**S**	0.5
External[1] with Relay (240V control)	ESFS-42	305031	ESFS-42A	305074	NS	0.5
External[1] with Relay (277V control)	ESFS-47	305040	—	—	**S**	0.5

1. Kit includes wall plate (discard plate if switch is to be installed on heater).
2. Do not use for 480V rated heaters. 480V heaters require fan relay option with proper control voltage relay coil.

Thermostat Kits

Model	PCN	Stock	Wt. (Lbs.)
LUH-TK1 (SPST)	**301129**	**S**	0.25
LUH TK2 (DPST)	**300530**	**S**	0.25

Power Disconnect Kits

3 Pole, 600V Rating

Model	Rating	PCN	Stock	Wt. (Lbs.)
EDS-1	40 Amp*	**303431**	**S**	0.5
EDS-2	80 Amp	**303440**	**S**	0.5
EDS-3	100 Amp	303458	NS	1

* EDS-1 Rating for 480V or less is 50 Amp.

Mounting Limitations

Hazardous Atmosphere — Unit heaters should not be used in potentially explosive atmospheres. ***Corrosive Atmosphere —*** The finish is not intended for direct salt spray exposure in marine applications or the highly corrosive atmospheres of greenhouses, swimming pools, chemical storage bins, etc. ***Mounting Height —*** Do not install unit heaters above recommended maximum mounting height. ***Obstructions*** must not block unit heater air inlet or discharge.

LUH Horizontal Blower Heater *(cont'd.)*

Specifications and Ordering Information

Electrical (60 Hz)				Motor					Air Delivery				Ordering			
kW	Volts	Ckt & Phase	Amps[4]	Volts	Phase	HP	RPM	CFM	FPM	Temp. Rise (°F)	Horiz. Throw (Ft.)	Mtg.[5] Height (Ft.)	Model	Stock	PCN	Wt. (Lbs.)
2.6	208	1 - 1	13.1	208	1	1/40	1,650	410	880	21	12	8	**LUH-02-81-34**	**S**	**303001**	32
2.0/2.6	208/240	1 - 1	11.4[2]	240	1	1/40	1,650	410	880	21	12	8	**LUH-02-21-34**	**S**	**303010**	32
2.6	277	1 - 1	9.6	277	1	1/30	1,550	360	770	24	12	8	**LUH-02-71-35**	**S**	**303028**	32
4	208	1 - 1	19.8	208	1	1/40	1,650	410	880	31	12	8	**LUH-04-81-34**	**S**	**303036**	32
4	208	1 - 3[3]	11.7	208	1	1/40	1,650	410	880	31	12	8	**LUH-04-83-34**	**S**	**303044**	32
3/4	208/240	1 - 1	17.2[2]	240	1	1/40	1,650	410	880	31	12	8	**LUH-04-21-34**	**S**	**303052**	32
3/4	208/240	1 - 3[3]	10.2[2]	240	1	1/40	1,650	410	880	31	12	8	**LUH-04-23-34**	**S**	**303060**	32
4	277	1 - 1	14.6	277	1	1/30	1,550	360	770	35	12	8	**LUH-04-71-35**	**S**	**303079**	32
4	480	1 - 3	5.1	480	1	1/35	1,550	380	815	33	12	8	**LUH-04-43-32**	**S**	**303087**	32
5	208	1 - 1	24.6	208	1	1/40	1,650	410	880	39	12	8	**LUH-05-81-34**	**S**	**303095**	32
5	208	1 - 3[3]	14.5	208	1	1/40	1,650	410	880	39	12	8	**LUH-05-83-34**	**S**	**303108**	32
3.75/5	208/240	1 - 1	21.4	240	1	1/40	1,650	410	880	39	12	8	**LUH-05-21-34**	**S**	**303116**	32
3.75/5	208/240	1 - 3[3]	12.6	240	1	1/40	1,650	410	880	39	12	8	**LUH-05-23-34**	**S**	**303124**	32
5	277	1 - 1	18.3	277	1	1/30	1,550	360	770	44	12	8	**LUH-05-71-35**	**S**	**303132**	32
5	480	1 - 3	6.3	480	1	1/35	1,550	380	815	42	12	8	**LUH-05-43-32**	**S**	**303140**	32
7.5	208	1 - 1[3]	36.5	208	1	1/15	1,725	850	1040	28	27	8	**LUH-07-81-34**	**S**	**303159**	50
7.5	208	1 - 3	21.3	208	1	1/15	1,275	850	1040	28	27	8	**LUH-07-83-34**	**S**	**303167**	50
5.6/7.5	208/240	1 - 1[3]	31.7[2]	240	1	1/15	1,725	850	1040	28	27	8	**LUH-07-21-34**	**S**	**303175**	50
5.6/7.5	208/240	1 - 3	18.5[2]	240	1	1/15	1,725	850	1040	28	27	8	**LUH-07-23-34**	**S**	**303183**	50
7.5	277	1 - 1	27.7	277	1	1/15	1,550	750	920	32	27	8	**LUH-07-71-35**	**S**	**303191**	50
7.5	480	1 - 3	9.9	480	3	1/15	1,725	850	1040	28	27	8	**LUH-07-43-32**	**S**	**303204**	50
7.5	600	1 - 3	7.6	575	3	1/3	1,725	850	1040	28	27	8	LUH-07-63-32	NS	—	50
9.7	208	1 - 1[3]	47.1	208	1	1/15	1,725	850	1040	37	27	9	**LUH-10-81-34**	**S**	**303212**	50
9.7	208	1 - 3	27.4	208	1	1/15	1,725	850	1040	37	27	9	**LUH-10-83-34**	**S**	**303220**	50
7.5/10	208/240	1 - 1[3]	42.1[2]	240	1	1/15	1,725	850	1040	37	27	9	**LUH-10-21-34**	**S**	**303239**	50
7.5/10	208/240	1 - 3	24.5[2]	240	1	1/15	1,725	850	1040	37	27	9	**LUH-10-23-34**	**S**	**303247**	50
10	480	1 - 3	12.9	480	3	1/15	1,725	850	1040	37	27	9	**LUH-10-43-32**	**S**	**303255**	50
10	600	1 - 3	10.6	575	3	1/3	1,725	850	1040	37	27	9	LUH-10-63-32	NS	—	50
12.5	208	1 - 3	35.2	208	1	1/15	1,725	850	1040	47	27	9	**LUH-12-83-34**	**S**	**303263**	50
9.3/12.5	208/240	1 - 3	30.6	240	1	1/15	1,725	850	1040	47	27	9	**LUH-12-23-34**	**S**	**303271**	50
12.5	480	1 - 3	15.9	480	3	1/15	1,725	850	1040	47	27	9	**LUH-12-43-32**	**S**	**303280**	50
12.5	600	1 - 3	12.6	575	3	1/3	1,725	850	1040	47	27	9	LUH-12-63-32	NS	—	50
15	208	1 - 3	42.1	208	1	1/15	1,725	850	1040	56	27	10	**LUH-15-83-34**	**S**	**303298**	50
11.25/15	208/240	1 - 3	36.6[2]	240	1	1/15	1,725	850	1040	56	27	10	**LUH-15-23-34**	**S**	**303300**	50
15	480	1 - 3	19.0	480	3	1/15	1,725	850	1040	56	27	10	**LUH-15-43-32**	**S**	**303319**	50
15	600	1 - 3	15.6	575	3	1/3	1,725	850	1040	56	27	10	LUH-15-63-32	NS	—	50
14.5/19.4	208/240	1 - 3	48.0[2]	240	3	1/3	1,725	1,240	1,160	53	31	11	**LUH-20-23-34**	**S**	**303327**	73
20	480	1 - 3	25.0	480	3	1/3	1,725	1,240	1,160	53	31	11	**LUH-20-43-32**	**S**	**303335**	73
20	600	1 - 3	19.6	575	3	1/3	1,725	1,240	1,160	53	31	11	LUH-20-63-32	NS	—	73
25	480	1 - 3	31.0	480	3	1/3	1,725	1,350	1,260	60	31	12	**LUH-25-43-32**	**S**	**303343**	73
25	600	1 - 3	24.6	575	3	1/3	1,725	1,350	1,260	60	31	12	LUH-25-63-32	NS	—	73
30	208	2 - 3	85.2	240	3	1/3	1,725	1,555	1,450	64	46	13	**LUH-30-83-34**	**S**	**303351**	106
22.5/30	208/240	2 - 3	74.0[2]	240	3	1/3	1,725	1,555	1,450	64	46	13	**LUH-30-23-34**	**S**	**303360**	106
30	480	2 - 3	37.1	480	3	1/3	1,725	1,555	1,450	64	46	13	**LUH-30-43-32**	**S**	**303378**	106
30	600	2 - 3	29.6	575	3	1/3	1,725	1,555	1,450	64	46	13	LUH-30-63-32	NS	—	106
26.25/35	208/240	2 - 3	86.0[2]	240	3	1/3	1,725	1,555	1,450	71	45	14	**LUH-35-23-34**	**S**	**303386**	106
35	480	2 - 3	43.1	480	3	1/3	1,725	1,555	1,450	71	45	14	**LUH-35-43-32**	**S**	**303394**	106
35	600	2 - 3	34.7	575	3	1/3	1,725	1,555	1,450	71	45	14	LUH-35-63-32	NS	—	106
28.5/38	208/240	2 - 3	93.3	240	3	1/3	1,725	1,555	1,450	84	44	15	**LUH-40-23-34**	**S**	**303407**	106
39	480	2 - 3	47.9	480	3	1/3	1,725	1,555	1,450	84	44	15	**LUH-40-43-32**	**S**	**303415**	106
40	600	2 - 3	39.7	575	3	1/3	1,725	1,555	1,450	84	44	15	LUH-40-63-32	NS	—	106
45	480	2 - 3	55.1	480	3	1/3	1,725	1,555	1,450	94	42	17	**LUH-45-43-32**	**S**	**303423**	106
45	600	2 - 3	43.7	575	3	1/3	1,725	1,555	1,450	94	42	17	LUH-45-63-32	NS	—	106

Stock Status: **S** = stock AS = assembly stock NS = non-stock
To Order—Specify model, PCN, kW, volts, phase and quantity.

1. For motor data, see table.
2. 208V amperage is 86% of 240V value.
3. Models can be field wired for 1 or 3 phase.
4. Includes motor Amps.
5. Maximum mounting height for effective heat distribution. Minimum height is 7 feet.

Other Notes —

A. All heaters have built-in contactors and stock 480V models have built-in control transformers and contactor with 120V holding coils. All stock 208 and 240V models have 208/240V holding coils. All stock 277V models have 277V holding coils.
B. Optional contactors available with 120 or 24V holding coils on made-to-order models, contact your Local Chromalox Sales office.
C. When total heater capacity exceeds 48 Amps, built-in fusing is provided behind a hinged and latched door in the side which allows easy access.

LUH Horizontal Blower Heater *(cont'd.)*

Recommended Control Options

PCN	Description	Kits			
		Thermostat	Fan Only	Remote Fan	Dis-connect
303001	LUH-02-81-34-00 208V 1P 2.6kW	LUH-TK1	ISFS-02	ESFS-42	EDS-1
303010	LUH-02-21-34-00 240V 1P 2.6kW	LUH-TK1	ISFS-02	ESFS-42	EDS-1
303028	LUH-02-71-35-00 277V 1P 2.6kW	LUH-TK1	ISFS-02	ESFS-47	EDS-1
303036	LUH-04-81-34-00 208V 1P 4kW	LUH-TK1	ISFS-02	ESFS-42	EDS-1
303044	LUH-04-83-34-00 208V 3P 4kW	LUH-TK1	ISFS-02	ESFS-42	EDS-1
303052	LUH-04-21-34-00 240V 1P 4kW	LUH-TK1	ISFS-02	ESFS-42	EDS-1
303060	LUH-04-23-34-00 240V 3P 4kW	LUH-TK1	ISFS-02	ESFS-42	EDS-1
303079	LUH-04-71-35-00 277V 1P 4kW	LUH-TK1	ISFS-02	ESFS-47	EDS-1
303087	LUH-04-43-32-00 480V 3P 4kW	LUH-TK1	ESFS-41	ESFS-41	EDS-1
303095	LUH-05-81-34-00 208V 1P 5kW	LUH-TK1	ISFS-02	ESFS-42	EDS-1
303108	LUH-05-83-34-00 208V 3P 5kW	LUH-TK1	ISFS-02	ESFS-42	EDS-1
303116	LUH-05-21-34-00 240V 1P 5kW	LUH-TK1	ISFS-02	ESFS-42	EDS-1
303124	LUH-05-23-34-00 240V 3P 5kW	LUH-TK1	ISFS-02	ESFS-42	EDS-1
303132	LUH-05-71-35-00 277V 1P 5kW	LUH-TK1	ISFS-02	ESFS-47	EDS-1
303140	LUH-05-43-32-00 480V 3P 5kW	LUH-TK1	ESFS-41	ESFS-41	EDS-1
303159	LUH-07-81-34-00 208V 1P 7.5kW	LUH-TK1	ISFS-02	ESFS-42	EDS-1
303167	LUH-07-83-34-00 208V 3P 7.5kW	LUH-TK1	ISFS-02	ESFS-42	EDS-1
303175	LUH-07-21-34-00 240V 1P 7.5kW	LUH-TK1	ISFS-02	ESFS-42	EDS-1
303183	LUH-07-23-34-00 240V 3P 7.5kW	LUH-TK1	ISFS-02	ESFS-42	EDS-1
303191	LUH-07-71-35-00 277V 1P 7.5kW	LUH-TK1	ISFS-02	ESFS-47	EDS-1
303204	LUH-07-43-32-00 480V 3P 7.5kW	LUH-TK1	ESFS-41	ESFS-41	EDS-1
303212	LUH-10-81-34-00 208V 1P 10kW	LUH-TK1	ISFS-02	ESFS-42	EDS-2

PCN	Description	Kits			
		Only Thermostat	Fan Only	Remote Fan	Dis-connect
303220	LUH-10-83-34-00 208V 3P 10kW	LUH-TK1	ISFS-02	ESFS-42	EDS-1
303239	LUH-10-21-34-00 240V 1P 10kW	LUH-TK1	ISFS-02	ESFS-42	EDS-2
303247	LUH-10-23-34-00 240V 3P 10kW	LUH-TK1	ISFS-02	ESFS-42	EDS-1
303255	LUH-10-43-32-00 480V 3P 10kW	LUH-TK1	ESFS-41	ESFS-41	EDS-1
303263	LUH-12-83-34-00 208V 3P 12.5kW	LUH-TK1	ISFS-02	ESFS-42	EDS-1
303271	LUH-12-23-34-00 240V 3P 12.5kW	LUH-TK1	ISFS-02	ESFS-42	EDS-1
303280	LUH-12-43-32-00 480V 3P 12.5kW	LUH-TK1	ESFS-41	ESFS-41	EDS-1
303298	LUH-15-83-34-00 208V 3P 15kW	LUH-TK1	ISFS-02	ESFS-42	EDS-2
303300	LUH-15-23-34-00 240V 3P 15kW	LUH-TK1	ISFS-02	ESFS-42	EDS-1
303319	LUH-15-43-32-00 480V 3P 15kW	LUH-TK1	ESFS-41	ESFS-41	EDS-1
303327	LUH-20-23-34-00 240V 3P 20kW	LUH-TK1	ISFS-02	ESFS-42A	EDS-2
303335	LUH-20-43-32-00 480V 3P 20kW	LUH-TK1	ESFS-41A	ESFS-41A	EDS-1
303343	LUH-25-43-32-00 480V 3P 25kW	LUH-TK1	ESFS-41A	ESFS-41A	EDS-1
303351	LUH-30-83-34-00 208V 3P 30kW	LUH-TK1	ISFS-02	ESFS-42A	EDS-3
303360	LUH-30-23-34-00 240V 3P 30kW	LUH-TK1	ISFS-02	ESFS-42A	EDS-2
303378	LUH-30-43-32-00 480V 3P 30kW	LUH-TK1	ESFS-41A	ESFS-41A	EDS-1
303386	LUH-35-23-34-00 240V 3P 35kW	LUH-TK1	ISFS-02	ESFS-42A	EDS-3
303394	LUH-35-43-32-00 480V 3P 35kW	LUH-TK1	ESFS-41A	ESFS-41A	EDS-2
303407	LUH-40-23-34-00 240V 3P 40kW	LUH-TK1	ISFS-02	ESFS-42A	EDS-3
303415	LUH-40-43-32-00 480V 3P 40kW	LUH-TK1	ESFS-41A	ESFS-41A	EDS-2
303423	LUH-45-43-32-00 480V 3P 45kW	LUH-TK1	ESFS-41A	ESFS-41A	EDS-2

When ordering LUH heaters, specify the model number and corresponding PCN (Product Code Number). If controls or thermostat/fan options are required, designate these options in the model number when ordering, as shown below. Always specify voltage, phase and kW by listing them on the purchase order product specifications.

Model Numbers

Chromalox Horizontal Unit Heater

Heating Elements

02 = 2.6 kW
04 = 4.0 k W
05 = 5.0 kW
07 = 7.5 kW
10 = 10.0 kW
12 = 12.5 kW
15 = 15.0 kW
20 = 20.0 kW
25 = 25.0 kW
30 = 30.0 kW
35 = 35.0 kW
40 = 40.0 kW
45 = 45.0 kW

Heater Voltage and Phase

81 = 208V, 1 Phase
83 = 208V, 3 Phase
21 = 240V, 1 Phase
23 = 240V, 3 Phase
71 = 277V, 1 Phase
43 = 480V, 3 Phase
63 = 600V, 3 Phase

Control

0 0 No Contactor(s)
3 0 24V Control Internal Transformer
3 1 24V Control Externally Supplied
3 2 120V Control Internal Transformer
3 3 120V Control Externally Supplied
3 4 208/240V Control Internally Supplied, No Transformer
3 5 277V Control Internally Supplied

Control

0 0 No Thermostat, No Summer Fan Switch
4 0 Internal Thermostat Only
4 1 Internal Therm. and Internal Sum. Fan Sw.
4 2 External Sum. Fan Sw. Only (Not 480V)
4 3 External Sum. Fan Sw. and Fan Relay (All Volts)
4 4 Rem. Fan Sw. and Internal Therm. (Not 480V)
4 5 Rem. Fan Sw., Fan Relay and Int. Therm. (All Volts)D, E, F, G
4 6 Internal Sum. Fan Sw. (Not 480 V)
4 7 Internal Sum. Fan Sw., Fan Relay (All Volts)

Disconnect Switch

1 40 Amp
2 80 Amp
3 100 Amp

LUH 05 21 34 41 1 Typical Model Number

HVH

Horizontal or Vertical Discharge Fan Forced Unit Heater

- **2.6 - 15 kW**
- **8,900 – 51,180 Btuh**
- **208, 240, 277, 480 and 600 Volt**
- **1 or 3 Phase**
- **Vertical or Horizontal Airflow**
- **Wall or Ceiling Mounted Configurations**
- **UL Listed and CSA Certified (North America)**
- **CE Certified (Europe)**

Description

Type HVH self-contained blower heater provides quiet, reliable fan-forced heating in all types of commercial and industrial applications.

Applications

- Shipping and Receiving Areas
- Pump Houses
- Power Generating Stations
- Aircraft Hangars
- Factories
- Warehouses
- Garages

Construction

Cabinet - Heavy 20 gauge steel, phosphate undercoated for corrosion resistance and finished in a two-tone gray polyester powder coat.

Louvers - Individually adjustable integral louvers direct air flow up or down as needed.

Fintube Heating Elements have corrosion resistant steel fins that are furnace brazed to the tubular heating element to assure long life and superior heat transfer.

Fan Motor - Totally enclosed fan motor is rated for continuous duty with built-in thermal cutout and operates on the same voltage as the heating circuit.

Dynamically Balanced Fan ensures smooth, quiet operation. Blade pitch is carefully selected so that the volume of air moved results in the optimum discharge air temperature. Pull-through air flow design draws air across heating elements for more even air flow distribution and cooler element operation.

Features

- **Integral 24V Control Transformer** is standard on 480V models and eliminates the need for an external control source(120V is optional).
- **Heavy Duty Magnetic Contactors** are standard on all models except 2.6 thru 5 kW single phase models, except for 480V models.
- **Linear Thermal Cutouts** open the control circuit and disconnect power to the heating elements if overheating occurs. Automatic Reset allows the control circuit to reclose and restore power when temperature returns to normal.
- **Field Convertible** — Combination 208/240V and 1 or 3 phase operation through 10 kW.

VERSATILE MOUNTING CONFIGURATIONS
Vertical Discharge
Recessed fasteners on the rear of the heater cabinet are internally threaded for suspension of unit in the vertical discharge mode with threaded rods.

Horizontal Discharge
Ceiling Bracket – The ceiling bracket allows you mount the heater directly to the ceiling or over-head member, simply and easily. The swivel mounting allows you to readily adjust the direction of warm air flow for maximum comfort up to 180˚ rotation.

Wall Mounting Bracket – The wall mounting brackets permits the heater to be rotated to face any direction.

Optional Features (Factory Installed or Field Installation Kits)

Summer Fan Switch Kit — Field installable for circulating warm stratified air. Available for all models.

Thermostat Kit — Field installable on all models. Range 40˚F - 90˚F (55˚F-105˚F thermostat is available).

Disconnect Switch — Field installable switch enables power to be disconnected while servicing heater. 50 Amp rating mounts on the front of the heater

Outlet Screen — Prevents objects from coming in contact with fan

Factory Installed options

- Pilot Light (recommended)
- Time Delay (heat on and off): Provides delay of fan operation until elements have warmed up. The fan stays on until cool.

Advantages

- Self Contained
- Versatile, Flexible and High Performance
- Easy Installation
- Minimum Maintenance
- Long Life
- Attractive Appearance

Because it has individually adjustable discharge louvers to direct air flow, and can be wall or ceiling (plus swivel) mounted, the HVH heater may be used in a variety of heating applications:

- Primary Heating
- Supplementary Heating
- Dual System Heating
- Spot Heating
- Entryway Air-Curtain Heating

HVH

Horizontal or Vertical Discharge Fan Forced Unit Heater *(cont'd.)*

Thermostat Kits (40-90°F)

Model	Rating	PCN	Stock	Wt. (Lbs.)
TK-5	SPST	219475	S	0.25
TK-6	DPST	219483	S	0.25

Power Disconnect Kit (3 Pole 600V)

Model	Rating	PCN	Stock	Wt. (Lbs.)
HDS-1	50 Amps	219491	S	0.5

Horizontal Discharge

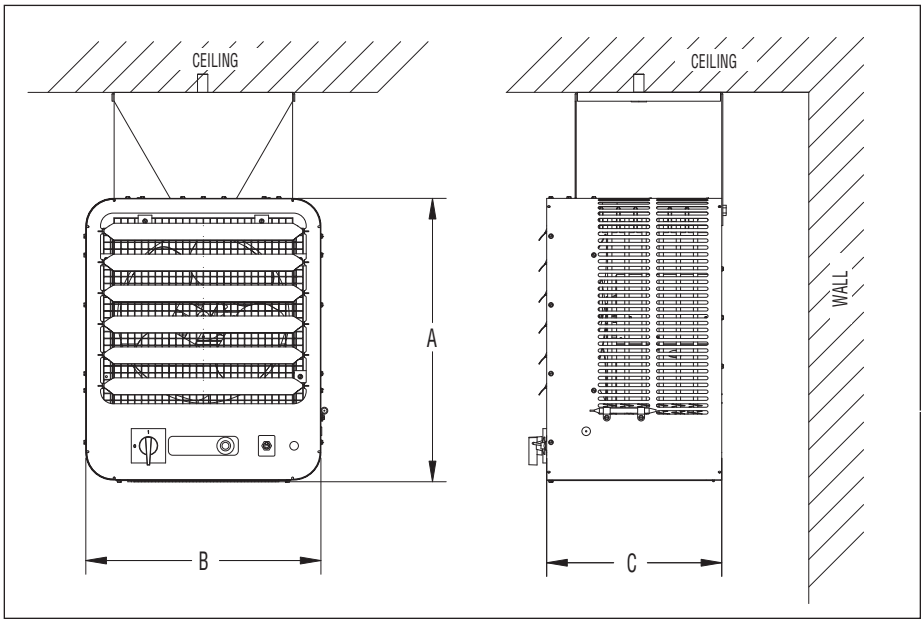

Heater	Dimensions (In.)		
	A	B	C
HVH-02 to 05	16-1/8	13	10
HVH-07 to 05	20-5/8	17-1/8	12-3/4

Rod Thread Type and Spacing Dimensions for Horizontal discharge

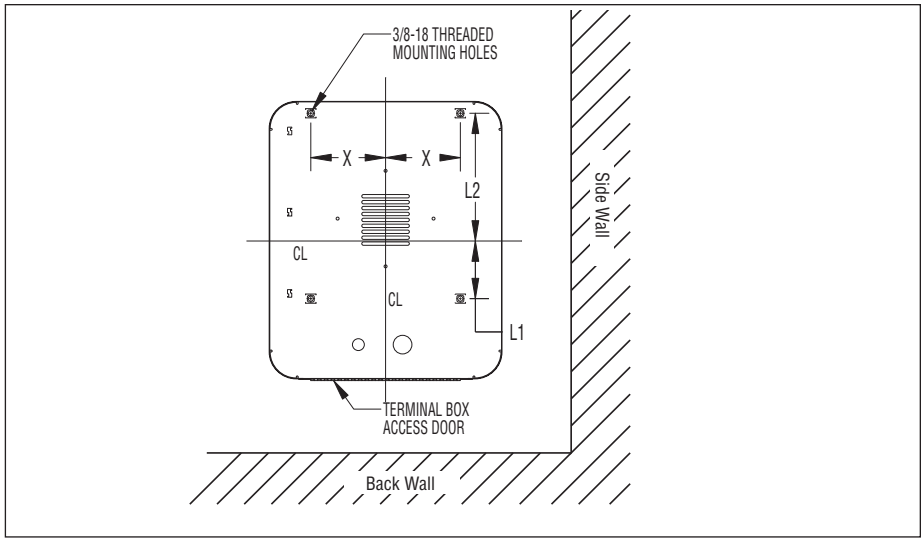

Unit	Rod Thread Type	Dimensions (In.)		
		L_1	L_2	X
2-5 kW	3/8 - 16	2-7/8	7-1/8	3-3/4
7-1/2 - 15 kW	3/8 - 16	4-5/16	9-3/8	5-1/2

Mounting Limitations

Hazardous Atmosphere — Unit heaters should not be used in potentially explosive atmospheres. ***Corrosive Atmosphere*** —The finish is not intended for direct salt spray exposure in marine applications or the highly corrosive atmospheres of greenhouses, swimming pools, chemical storage bins, etc. ***Mounting Height*** — Do not install unit heaters above recommended maximum mounting height. Obstructions must not block unit heater air inlet or discharge.

HVH

Horizontal or Vertical Discharge Fan Forced Unit Heater *(cont'd.)*

Optional Wall Swivel Mounting Bracket

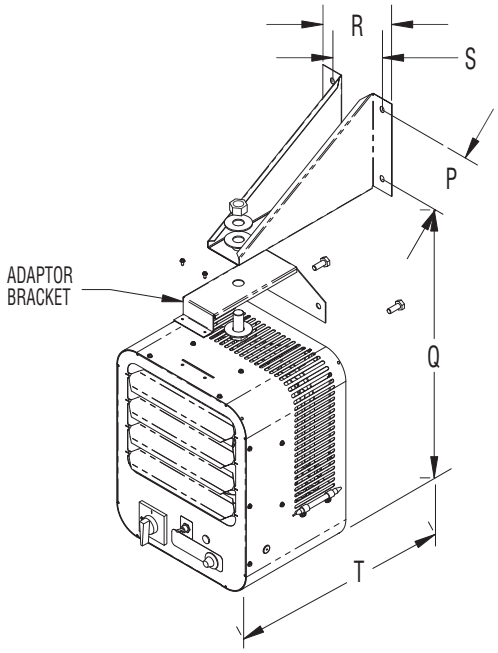

Bracket Model No.	PCN	Dimensions (In.)					Bracket Wt. (lbs.)	Use With
		P	Q	R	S	T		
HVW-1	219416	6-1/6	18-7/8	7	5	17-5/8	3-3/4	HVH-02, 04, 05
HVW-2	219424	6-1/6	23-1/4	7	5	18-5/8	6-1/2	HVH-07, 10, 15

Optional Ceiling Swivel Mounting Bracket

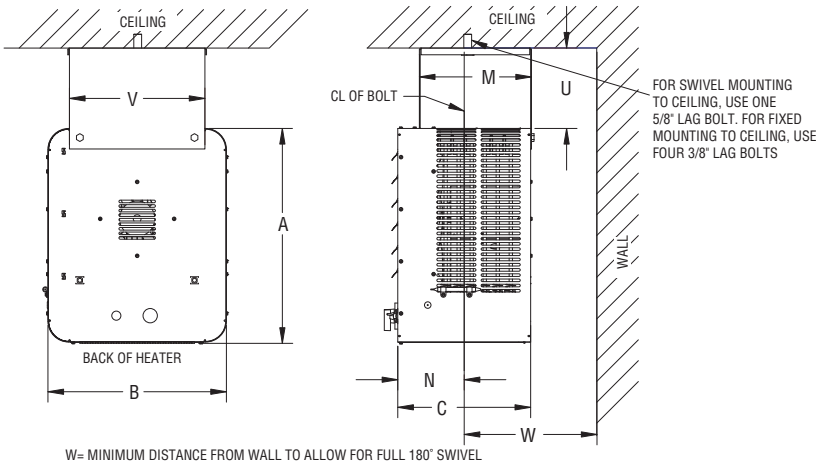

Bracket Model No.	PCN	Dimensions (In.)								Wt. (lbs.)	Use With
		A	B	C	M	N	U	V	W		
HVC-1	219432	16-1/8	13	10	8-3/8	5-3/4	7-3/4	9-3/4	12	4	HVH-02, 04, 05
HVC-2	219440	20-5/8	17-1/8	12-3/4	10-3/4	6-3/4	7-3/4	12	12	8	HVH-07, 10, 12, 15

Optional Fan Only Kits

Description	Model	PCN	Stock	Wt. (lbs.)
Fan switch (no relay)	HVF-01	**219504**	**S**	0.25
Fan switch (24V relay)	HVF-02	**219512**	**S**	0.5
Fan switch (120V relay)	HVF-03	**219520**	**S**	0.5

HVH Horizontal or Vertical Discharge Fan Forced Unit Heater *(cont'd.)*

Specifications and Ordering Information

Electrical (60 Hz)				Motor					Air Delivery				Ordering			
kW	Volts	Ckt & Phase	Amps[4]	Volts	Phase	HP	RPM	CFM	FPM	Temp. Rise (°F)	Horiz. Throw (Ft.)	Mtg.[5] Height (Ft.)	Model	Stock	PCN	Wt. (Lbs.)
2.6	208	1 - 1	13.1	208	1	1/40	1,650	410	880	21	12	8	**HVH-02-81-00**	**S**	**219096**	32
2/2.6	208/240	1 - 1	11.4[2]	240	1	1/40	1,650	410	880	21	12	8	**HVH-02-21-00**	**S**	**219109**	32
2.6	277	1 - 1	9.6	277	1	1/30	1,550	360	770	24	12	8	**HVH-02-71-00**	**S**	**219117**	32
4	208	1 - 1	19.8	208	1	1/40	1,650	410	880	31	12	8	**HVH-04-81-00**	**S**	**219125**	32
4	208	1 - 3[3]	11.7	208	1	1/40	1,650	410	880	31	12	8	**HVH-04-83-34**	**S**	**219133**	32
3/4	208/240	1 - 1	17.2[2]	240	1	1/40	1,650	410	880	31	12	8	**HVH-04-21-00**	**S**	**219141**	32
3/4	208/240	1 - 3[3]	10.2[2]	240	1	1/40	1,650	410	880	31	12	8	**HVH-04-23-34**	**S**	**219150**	32
4	277	1 - 1	14.6	277	1	1/30	1,550	360	770	35	12	8	**HVH-04-71-00**	**S**	**219168**	32
4	480	1 - 3	5.1	480	1	1/35	1,550	380	815	33	12	8	**HVH-04-43-30**	**S**	**219176**	32
5	208	1 - 1	24.6	208	1	1/40	1,650	410	880	39	12	8	**HVH-05-81-00**	**S**	**219184**	32
5	208	1 - 3[3]	14.5	208	1	1/40	1,650	410	880	39	12	8	**HVH-05-83-34**	**S**	**219192**	32
3.75/5	208/240	1 - 1	21.4	240	1	1/40	1,650	410	880	39	12	8	**HVH-05-21-00**	**S**	**219205**	32
3.75/5	208/240	1 - 3[3]	12.6	240	1	1/40	1,650	410	880	39	12	8	**HVH-05-23-34**	**S**	**219213**	32
5	277	1 - 1	18.3	277	1	1/30	1,550	360	770	44	12	8	**HVH-05-71-00**	**S**	**219221**	32
5	480	1 - 3	6.3	480	1	1/35	1,550	380	815	42	12	8	**HVH-05-43-30**	**S**	**219230**	32
7.5	208	1 - 1[3]	36.5	208	1	1/15	1,725	850	1040	28	27	8	**HVH-07-81-34**	**S**	**219248**	50
7.5	208	1 - 3	21.3	208	1	1/15	1,725	850	1040	28	27	8	**HVH-07-83-34**	**S**	**219256**	50
5.6/7.5	208/240	1 - 1[3]	31.7[2]	240	1	1/15	1,725	850	1040	28	27	8	**HVH-07-21-34**	**S**	**219264**	50
5.6/7.5	208/240	1 - 3	18.5[2]	240	1	1/15	1,725	850	1040	28	27	8	**HVH-07-23-34**	**S**	**219272**	50
7.5	277	1 - 1	27.7	277	1	1/15	1,550	750	920	32	27	8	**HVH-07-71-30**	**S**	**219280**	50
7.5	480	1 - 3	9.9	480	3	1/15	1,725	850	1040	28	27	8	**HVH-07-43-30**	**S**	**219299**	50
7.5	600	1 - 3	7.6	575	3	1/3	1,725	850	1040	28	27	8	HVH-07-63-30	NS	—	50
9.7	208	1 - 1[3]	47.1	208	1	1/15	1,725	850	1040	37	27	9	**HVH-10-81-34**	**S**	**219301**	50
9.7	208	1 - 3	27.4	208	1	1/15	1,725	850	1040	37	27	9	**HVH-10-83-34**	**S**	**219310**	50
7.5/10	208/240	1 - 1[3]	42.1[2]	240	1	1/15	1,725	850	1040	37	27	9	**HVH-10-21-34**	**S**	**219328**	50
7.5/10	208/240	1 - 3	24.5[2]	240	1	1/15	1,725	850	1040	37	27	9	**HVH-10-23-34**	**S**	**219336**	50
10	480	1 - 3	12.9	480	3	1/15	1,725	850	1040	37	27	9	**HVH-10-43-30**	**S**	**219344**	50
10	600	1 - 3	10.6	575	3	1/3	1,725	850	1040	37	27	9	HVH-10-63-30	NS	—	50
12.5	208	1 - 3	35.2	208	1	1/15	1,725	850	1040	47	27	9	**HVH-12-83-34**	**S**	**219352**	50
9.3/12.5	208/240	1 - 3	30.6	240	1	1/15	1,725	850	1040	47	27	9	**HVH-12-23-34**	**S**	**219360**	50
12.5	480	1 - 3	15.9	480	3	1/15	1,725	850	1040	47	27	9	**HVH-12-43-30**	**S**	**219379**	50
12.5	600	1 - 3	12.6	575	3	1/3	1,725	850	1040	47	27	9	HVH-12-63-30	NS	—	50
15	208	1 - 3	42.1	208	1	1/15	1,725	850	1040	56	27	10	**HVH-15-83-34**	**S**	**219387**	50
11.25/15	208/240	1 - 3	36.6[2]	240	1	1/15	1,725	850	1040	56	27	10	**HVH-15-23-34**	**S**	**219395**	50
15	480	1 - 3	19.0	480	3	1/15	1,725	850	1040	56	27	10	**HVH-15-43-30**	**S**	**219408**	50
15	600	1 - 3	15.6	575	3	1/3	1,725	850	1040	56	27	10	HVH-15-63-30	NS	—	50

Stock Status: **S** = stock AS = assembly stock NS = non-stock
To Order—Specify model, PCN, kW, volts, phase and quantity.

1. For motor data, see table.
2. 208V amperage is 86% of 240V value.
3. Models can be field wired for 1 or 3 phase.
4. Includes motor Amps.
5. Maximum mounting height for effective heat distribution. Minimum height is 7 feet.

Other Notes —

A. All heaters have built-in contactors except 2.6 thru 5 kW single phase models, and stock 480V models have built-in control transformers and contactors with 24V holding coils. All 208 and 240V 3 phase models, 4kW and above, have 208/240V holding coils. All stock 277V models have 277V holding coils.

B. Optional contactors holding coil voltages of 24V or 120V and control voltage transformers, are available as made-to-order models for all heater ratings.

HVH Horizontal or Vertical Discharge Fan Forced Unit Heater *(cont'd.)*

Recommended Control Options

Heater		Heater Compatible, Field Installable, Accessory Options											Factory Installable Options	
Model No.	PCN	HVW-1 219416	HVW-2 219424	HVC-1 219432	HVC-2 219440	HVS-1 219459	HVS-2 219467	TK-5 219475	TK-6 219483	HDS-1 219491	HVF-01 219504	HVF-02 219512	HFD-1**	PL-1**
HVH-02-81-00	219096	X		X		X			X	X				X
HVH-02-21-00	219109	X		X		X			X	X				X
HVH-02-71-00	219117	X		X		X			X	X				
HVH-04-81-00	219125	X		X		X			X	X				X
HVH-04-83-34	219133	X		X		X		X		X	X			X
HVH-04-21-00	219141	X		X		X			X	X				X
HVH-04-23-34	219150	X		X		X		X		X	X			X
HVH-04-71-00	219168	X		X		X			X	X				
HVH-04-43-30	219176	X		X		X		X		X	X		X	X
HVH-05-81-00	219184	X		X		X			X	X				X
HVH-05-83-34	219192	X		X		X		X		X	X			X
HVH-05-21-00	219205	X		X		X			X	X				X
HVH-05-23-34	219213	X		X		X		X		X	X			X
HVH-05-71-00	219221	X		X		X			X	X				
HVH-05-43-30	219230	X		X		X		X		X	X		X	X
HVH-07-81-34	219248		X		X		X	X		X	X			X
HVH-07-83-34	219256		X		X		X	X		X	X			X
HVH-07-21-34	219264		X		X		X	X		X	X			X
HVH-07-23-34	219272		X		X		X	X		X	X			X
HVH-07-71-30	219280		X		X		X	X		X	X			
HVH-07-43-30	219299		X		X		X	X		X	X	X	X	X
HVH-10-81-34	219301		X		X		X	X		X	X			X
HVH-10-83-34	319310		X		X		X	X		X	X			X
HVH-10-21-34	219328		X		X		X	X		X	X			X
HVH-10-23-34	219336		X		X		X	X		X	X			X
HVH-10-43-30	219344		X		X		X	X		X	X	X	X	X
HVH-12-83-34	219352		X		X		X	X		X	X			X
HVH-12-23-34	219360		X		X		X	X		X	X			X
HVH-12-43-30	219379		X		X		X	X		X	X	X	X	X
HVH-15-83-34	219387		X		X		X	X		X	X			X
HVH-15-23-34	219395		X		X		X	X		X	X			X
HVH-15-43-30	219408		X		X		X	X		X	X	X	X	X

Notes:
*Includes all field installable options
**HFD-1 is a fan delay on/fan delay off
***PL-1 is a green pilot light indicating power to heater

HVH Horizontal or Vertical Discharge Fan Forced Unit Heater *(cont'd.)*

When ordering HVH heaters, specify the model number and corresponding PCN (Product Code Number). If controls (thermostat, fan switch, transformer, disconnect) or other options are required, designate these options in the model number when ordering, as shown below. Always specify voltage, phase and kW by listing them on the purchase order specifications.

HVH **Horizontal or Vertical Discharge Blower Heater**

kW

02	2.6 kW
04	4.0 k W
05	5.0 kW
07	7.5 kW
10	10.0 kW
12	12.5 kW
15	15.0 kW

Volts

2	240V
4	480V
6	600V
7	277V
8	208V
A	220V
B	380V
C	400V
D	415V

Phase

1	1
3	3

Control

00	No Contactor
30	Contactor with 24V Transformer
31	Contactor with 24V Externally Supplied
32	Contactor with 120V Transformer
33	Contactor with 120V Externally Supplied
34	Contactor with 208/240V Internally Supplied
35	Contactor with 277V Internally Supplied

Intergral Thermostat

0	None
TL	40-90˚F Range
TH	55-105˚F Range

Disconnect Switch

0	None
D	Yes

Fan Only Switch

00	None
FI	Internal (In Heater)
FE	External (On Wall)

Time Delay

0	None
R	Yes

Pilot Light

0	None
P	Yes

Outlet Screen

0	None
S	Yes

HVH	**05**	**2**	**1**	**34**	**TL**	**D**	**FI**	**-0**	**-0**	**-0**	**Typical Model Number**

KUH
Horizontal Blower Heater

- **20 - 45 kW**
- **68,000 - 153,000 Btuh**
- **208, 240, 277, 480 and 600 Volt**
- **1 or 3 Phase**
- **Wall or Ceiling Mounted Configurations**

Description

Type KUH self-contained heater provides quiet, reliable fan-forced heating in all types of commercial and industrial applications.

Applications

- Shipping and Receiving Areas
- Pump Houses
- Power Generating Stations
- Aircraft Hangars
- Factories
- Warehouses
- Garages

Construction

Die Formed Cabinet — Heavy 18 gauge steel, phosphate undercoated for corrosion resistance and finished in gray polyester powder coat.

Louvers — Individually adjustable louvers direct air flow up or down as needed.

Fintube Heating Elements have corrosion resistant steel fins that are furnace brazed to the tubular heating element to assure long life and superior heat transfer.

Fan Motor — Totally enclosed fan motor is rated for continuous duty with built-in thermal cutout and operates on same voltage as the heating circuit.

Dynamically Balanced Fan is attached with rubber vibration insulators for smooth, quiet operation. Blade pitch is carefully selected so that the volume of air moved results in the optimum discharge air temperature.

Features

- **Sub-divided Circuits with Individual Fuse Protection —** Standard on all heaters with a total current draw of 48 Amps or greater. The fuse compartment is conveniently located for easy access.
- **Integral 24V Control Transformer —** Standard on 480V models, eliminates the need for an external control source.
- **Heavy Duty Magnetic Contactors** are standard on all models.
- **Thermal Cutouts** open the control circuit and disconnect power to the heating elements if overheating occurs. **Automatic Reset** allows the control circuit to reclose and restore power when temperature returns to normal.
- **Mounting Configurations —** Recessed welded fasteners on top of the heater cabinet are internally threaded for suspension of unit with threaded rods. Ceiling and Universal Wall Swivel brackets are optional. The ceiling bracket lets you mount heater directly to ceiling or over-head member, simply and easily. The swivel mounting allows you to readily adjust the direction of warm air flow for maximum comfort up to 180 degrees.

Optional Features (Factory Installed or Field Installation Kits)

Summer Fan Switch Kit — Field installable for circulating warm stratified air. Available for all models.

Thermostat Kit — Field installable on all models. Range 40°F - 90°F.

Disconnect Switch — Field installable switch enables power to be disconnected while servicing heater. 40, 80 and 100 Amp models available. Mounts in the back of the heater.

- **Ceiling Bracket** (shown above)
- **Wall Mounting Bracket**

Advantages

- Self Contained
- Versatile, Flexible and High Performance
- Easy Installation
- Minimum Maintenance
- Long Life
- Attractive Appearance

Because it has individually adjustable discharge louvers to direct air flow, and can be wall or ceiling (plus swivel) mounted, the KUH heater may be used in a variety of heating applications:

- Primary Heating
- Supplementary Heating
- Dual System Heating
- Spot Heating
- Entryway Air-Curtain Heating

Refer to WR-80, RTC, WR-90, WT-121, WT-122 and WTL-121 in the Controls section.

KUH

Horizontal Blower Heater *(cont'd.)*

Dimensions (Inches)

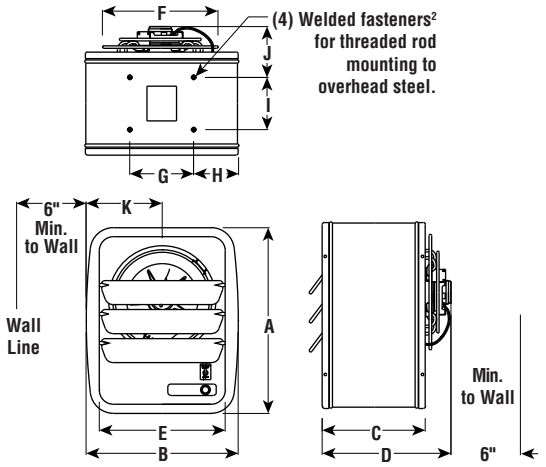

Wall Mounted Universal Bracket

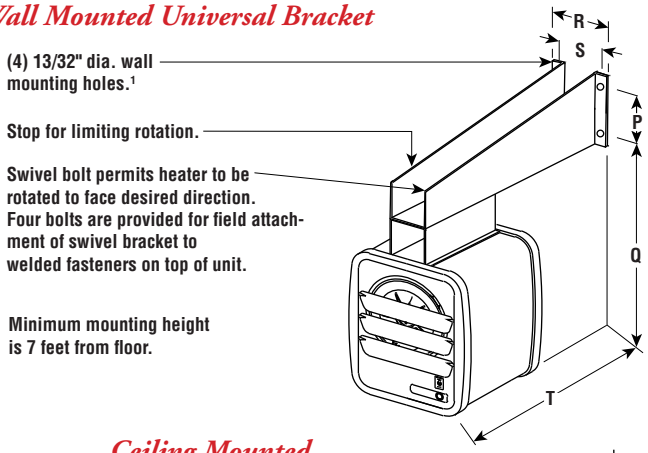

Ceiling Mounted

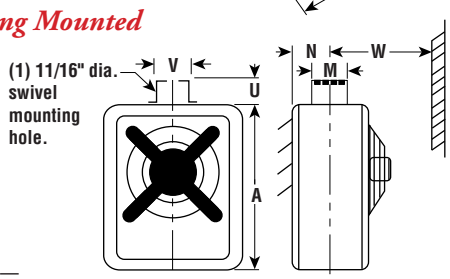

Wall Mounted Heaters

Heater	Dimensions (In.) P	Q	R	S	T	Wall Bracket	PCN	Stock	Wt. (Lbs.)
KUH-20, 25	2	32	9-1/2	8-3/8	22-1/4	BUH-02A	304506	S	7
KUH-30, 35, 40, 45	5-1/2	28-11/16	5	3-1/2	33-1/4	BUH-03A	304514	S	10

Notes —
1. Wall mounting fasteners to be supplied by customer.
2. Threaded rod to be supplied by customer.

Ceiling Mounted Heaters

Heater	Dimensions (In.) A	B	C	D	E	F	G	H	I	J	K	M	N	U	V	W	Ceiling Bracket	PCN	Stock	Wt. (Lbs.)
KUH-20, 25	24	20-1/8	11-1/2	20-1/2	16-3/4	16	8-1/4	6	6-1/4	12	10-1/16	8	6-1/4	6	7-1/4	16	BUH-05	304477	S	3
KUH-30, 35, 40, 45	24	20-1/8	17	26	16-3/4	16	8-1/4	6	11-3/4	12	10-1/16	13-3/4	9-5/16	6	7-1/4	21	BUH-06	304485	S	3

Optional Control Accessories & Remote Thermostats
Fan Only Operation Kits

Summer Fan Switch

Thermostat Kit

Note — A fan only operation (optional) is available by means of a built-in switch or by external control.

Summer Fan Switch	(2 - 15 kW) Model	PCN	(20 - 45 kW) Model	PCN	Stock	Wt. (Lbs.)
Internal 208- 277V	ISFS-02[2]	305007	ISFS-02	305007	S	0.25
External[1] with Relay (24V control)	ESFS-40	305015	ESFS-40A	305058	S	0.5
External[1] with Relay (120V control)	ESFS-41	305023	ESFS-41A	305066	S	0.5
External[1] with Relay (240V control)	ESFS-42	305031	ESFS-42A	305074	S	0.5
External[1] with Relay (277V control)	ESFS-47	305040	—	—	S	0.5

1. Kit includes wall plate (discard plate if switch is to be installed on heater).
2. Do not use for 480V rated heaters. 480V heaters require fan relay option with proper control voltage relay coil.

Thermostat Kits

Model	PCN	Stock	Wt. (Lbs.)
KUH-TK3 (SPST) 40° to 90° F	302519	S	0.25
KUH TK4 (DPST) 40° to 90° F	302527	S	0.25

Power Disconnect Kits

3 Pole, 600V Rating

Model	Rating	PCN	Stock	Wt. (Lbs.)
KDS-1	40 Amp*	304434	S	0.5
KDS-2	80 Amp	304442	S	0.5
KDS-3	100 Amp	304450	S	1

* KDS-1 Rating for 480V or less is 50 Amp.

Mounting Limitations

Hazardous Atmosphere — Unit heaters should not be used in potentially explosive atmospheres. ***Corrosive Atmosphere*** —The finish is not intended for direct salt spray exposure in marine applications or the highly corrosive atmospheres of greenhouses, swimming pools, chemical storage bins, etc. ***Mounting Height*** — Do not install unit heaters above recommended maximum mounting height. ***Obstructions*** must not block unit heater air inlet or discharge.

KUH Horizontal Blower Heater *(cont'd.)*

Specifications and Ordering Information

Electrical (60 Hz)				Motor					Air Delivery				Ordering			
kW	Volts	Ckt & Phase	Amps[4]	Volts	Phase	HP	RPM	CFM	FPM	Temp. Rise (°F)	Horiz. Throw (Ft.)	Mtg.[5] Height (Ft.)	Model	Stock	PCN	Wt. (Lbs.)
14.5/19.4	208/240	1 - 3	48.0[2]	240	3	1/3	1,725	1,240	1,160	53	31	11	**KUH-20-23-34**	**S**	**304320**	73
20	480	1 - 3	25.0	480	3	1/3	1,725	1,240	1,160	53	31	11	**KUH-20-43-30**	**S**	**304338**	73
20	600	1 - 3	19.6	575	3	1/3	1,725	1,240	1,160	53	31	11	KUH-20-63-30	NS	—	73
25	480	1 - 3	31.0	480	3	1/3	1,725	1,350	1,260	60	31	12	**KUH-25-43-30**	**S**	**304346**	73
25	600	1 - 3	24.6	575	3	1/3	1,725	1,350	1,260	60	31	12	KUH-25-63-30	NS	—	73
30	208	2 - 3	85.2	240	3	1/3	1,725	1,555	1,450	64	46	13	**KUH-30-83-34**	**S**	**304354**	106
22.5/30	208/240	2 - 3	74.0[2]	240	3	1/3	1,725	1,555	1,450	64	46	13	**KUH-30-23-34**	**S**	**304362**	106
30	480	2 - 3	37.1	480	3	1/3	1,725	1,555	1,450	64	46	13	**KUH-30-43-30**	**S**	**304370**	106
30	600	2 - 3	29.6	575	3	1/3	1,725	1,555	1,450	64	46	13	KUH-30-63-30	NS	—	106
26.25/35	208/240	2 - 3	86.0[2]	240	3	1/3	1,725	1,555	1,450	71	45	14	**KUH-35-23-34**	**S**	**304389**	106
35	480	2 - 3	43.1	480	3	1/3	1,725	1,555	1,450	71	45	14	**KUH-35-43-30**	**S**	**304397**	106
35	600	2 - 3	34.7	575	3	1/3	1,725	1,555	1,450	71	45	14	KUH-35-63-30	NS	—	106
28.5/38	208/240	2 - 3	93.3	240	3	1/3	1,725	1,555	1,450	84	44	15	**KUH-40-23-34**	**S**	**304400**	106
39	480	2 - 3	47.9	480	3	1/3	1,725	1,555	1,450	84	44	15	**KUH-40-43-30**	**S**	**304418**	106
40	600	2 - 3	39.7	575	3	1/3	1,725	1,555	1,450	84	44	15	KUH-40-63-30	NS	—	106
45	480	2 - 3	55.1	480	3	1/3	1,725	1,555	1,450	94	42	17	**KUH-45-43-30**	**S**	**304426**	106
45	600	2 - 3	43.7	575	3	1/3	1,725	1,555	1,450	94	42	17	KUH-45-63-30	NS	—	106

Stock Status: **S** = stock AS = assembly stock NS = non-stock
To Order—Specify model, PCN, kW, volts, phase and quantity.

1. For motor data, see table.
2. 208V amperage is 86% of 240V value.
3. Models can be field wired for 1 or 3 phase.
4. Includes motor Amps.
5. Maximum mounting height for effective heat distribution. Minimum height is 7 feet.

Other Notes —

A. All heaters have built-in contactors, and stock 480V models have built-in control transformers and contactor with 24V holding coils. All stock 208 and 240V models have 208/240V holding coils. All stock 277V models have 277V holding coils.
B. Optional contactors available with 24V holding coils on made-to-order models, contact your Local Chromalox Sales office.
C. When total heater capacity exceeds 48 Amps, built-in fusing is provided behind a hinged and latched door in the side which allows easy access.

KUH
Horizontal Blower Heater *(cont'd.)*

Recommended Control Options

PCN	Description	Kits			Dis-connect
		Only Thermostat	Fan Only	Remote Fan	
304320	KUH-20-23-34 240V 3P 20kW	KUH-TK3	ISFS-02	ESFS-42A	KDS-2
304338	KUH-20-43-30 480V 3P 20kW	KUH-TK3	ESFS-40A	ESFS-40A	KDS-1
304346	KUH-25-43-30 480V 3P 25kW	KUH-TK3	ESFS-40A	ESFS-40A	KDS-1
304354	KUH-30-83-34 208V 3P 30kW	KUH-TK3	ISFS-02	ESFS-42A	KDS-3
304362	KUH-30-23-34 240V 3P 30kW	KUH-TK3	ISFS-02	ESFS-42A	KDS-2
304370	KUH-30-43-30 480V 3P 30kW	KUH-TK3	ESFS-40A	ESFS-40A	KDS-1
304389	KUH-35-23-34 240V 3P 35kW	KUH-TK3	ISFS-02	ESFS-42A	KDS-3
304397	KUH-35-43-30 480V 3P 35kW	KUH-TK3	ESFS-40A	ESFS-40A	KDS-2
304400	KUH-40-23-34 240V 3P 40kW	KUH-TK3	ISFS-02	ESFS-42A	KDS-3
304418	KUH-40-43-30 480V 3P 40kW	KUH-TK3	ESFS-40A	ESFS-40A	KDS-2
304426	KUH-45-43-30 480V 3P 45kW	KUH-TK3	ESFS-40A	ESFS-40A	KDS-2

When ordering KUH heaters, specify the model number and corresponding PCN (Product Code Number). If controls or thermostat/fan options are required, designate these options in the model number when ordering, as shown below. Always specify voltage, phase and kW by listing them on the purchase order product specifications.

Model Numbers

Chromalox Horizontal Unit Heater

Heating Elements

20 20.0 kW
25 25.0 kW
30 30.0 kW
35 35.0 kW
40 40.0 kW
45 45.0 kW

Heater Voltage and Phase

81 208V, 1 Phase
83 208V, 3 Phase
21 240V, 1 Phase
23 240V, 3 Phase
71 277V, 1 Phase
43 480V, 3 Phase
63 600V, 3 Phase

Control

00 No Contactor(s)
30 24V Control Internal Transformer
31 24V Control Externally Supplied
32 120V Control Internal Transformer
33 120V Control Externally Supplied
34 208/240V Control Internally Supplied, No Transformer
35 277V Control Internally Supplied

Control

00 No Thermostat, No Summer Fan Switch
40 Internal Thermostat Only
41 Internal Therm. and Internal Sum. Fan Sw.
42 External Sum. Fan Sw. Only (Not 480 V)
43 External Sum. Fan Sw. and Fan Relay (All Volts)
44 Rem. Fan Sw. and Internal Therm. (Not 480 V)
45 Rem. Fan Sw., Fan Relay and Int. Therm. (All Volts)D, E, F, G
46 Internal Sum. Fan Sw. (Not 480 V)
47 Internal Sum. Fan Sw., Fan Relay (All Volts)

Disconnect Switch

1 40 Amp
2 80 Amp
3 100 Amp

KUH 20 43 31 41 1 Typical Model Number

UB
High Capacity Horizontal Blower Heater

- **2 - 50 kW**
- **6,820 - 170,600 Btuh**
- **120, 208, 240, 277, 480 and 550 Volt**
- **1 or 3 Phase**
- **Wall or Ceiling Mounted Configurations**

Description

Rugged, industrial UB heaters are ideal for factories, warehouses, garages or any other area that requires a high volume of forced-air heat.

Applications

- Entryway Air-Curtain Heating
- Power Generating Stations
- Factories
- Freeze Protection of Machinery

Construction (2 - 50 kW models)

Painted Finish — For attractive appearance and corrosion resistance.

Cabinet — 16 gauge steel cabinet construction supported with an 18 gauge base assembly and finished in almond powder.

Louvers — Adjustable discharge grille to direct the air flow up or down.

Heavy Gauge Rear Wire Grille protects against accidental contact with rapidly rotating fan blade.

Metal Sheath Fintube® Heating Elements — The electric heat bank - Chromalox patented metal sheath Fintube® heating elements. Heat radiation fins are corrosion-resistant copper-clad steel, furnace brazed to the tubular heating elements to assure superior heat transfer. Wide spacing prevents clogging. Air is evenly drawn across the circumferential elements preventing hot spots and prolonging element life.

Rugged Motor and Dynamically Balanced Fan provides a high volume of hot air.

Integral Automatic Reset Thermal Cutout for fast heat response and overheat protection.

Features (2 - 20 kW models)

Fan Only Operation — UB-23 and UB-32, (excluding the 120V UB-32), have a separate fan control switch for circulating air during summer months.

Totally Enclosed Fan Motor — Continuous duty with built-in automatic reset thermal overload protection operates on same voltage as supplied to the heater, except on 480 and 550 volt where motor is either 115 or 230 volts. All motors are single phase with sleeve bearings.

Heaters with model numbers having a suffix "T" include a transformer to stepdown the voltage for operating the fan motor.

External contactor is not necessary with heaters having a model number suffix "R".

Wall or Ceiling Mounting Brackets are available separately for field installation depending on mounting arrangement desired.

Features (25 - 50 kW models)

Universal Wall & Ceiling Mounting Bracket is included to provide flexibility in the mounting arrangement.

Fan Interlock — Fan motor contactor includes a set of auxiliary contacts to prevent heating elements from being energized unless contacts of fan motor contactor are closed.

Thermal Fan Delay allows fan motor to continue to operate after heating thermostat has been satisfied to maximize transfer of generated heat to space being heated and extend operating life of heating elements.

Built-in Controlling Contactors and Line Fusing — All heaters drawing 48 Amps or greater are sub-divided into two (2) circuits with built-in line fuses and controlling contactors. Units drawing less than 48 Amps have built-in contactors only, line fusing must be provided externally. All units regardless of amperage rating have built-in fuse protection for the motor and transformer.

Integral 120V Control Circuit — 120 volt power for the control circuit is provided from the unit mounted transformer to eliminate the need to run separate power to the unit for control.

Heavy Duty 1/3 HP Motor operates at 1,550 RPM on line voltage. Motor has built-in thermal overload protection, permanently lubricated ball bearings and factory installed line fuses for maximum trouble-free service life.

Advantages

- Low Maintenance
- High Capacity
- Primary Heating
- Supplementary Heating
- Dual System Heating
- Long Horizontal Air Throw
- Long Life

Refer to WR-80, WR-90 in the Controls section.

UB

High Capacity Horizontal Blower Heater *(cont'd.)*

Mounting Kits

For 2 -20 kW Heaters - Order Separately

Heater	Model	PCN
Ceiling Mounting Brackets		
UB-23 and 32	1-44419	264330
UB-502 and 752	2-44419	264348
UB-1002, 1252, 1502 and 2002	3-44419	264356
Wall Mounting Brackets		
UB-23 and 32	WUB-1	264305
UB-502 and 752	WUB-3	264313
UB-1002, 1252, 1502 and 2002	WUB-4	264321

For 25 - 50 kW Heaters - a Universal Wall & Ceiling Mounting Bracket is included.

Ceiling Mounting Kit (2-20 kW) — Dimensions (Inches)

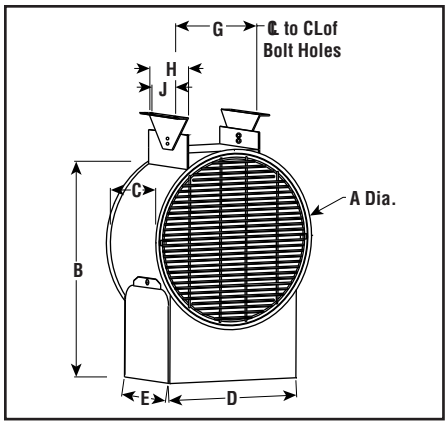

Wall Mounting Kit (2-20 kW) — Dimensions (Inches)

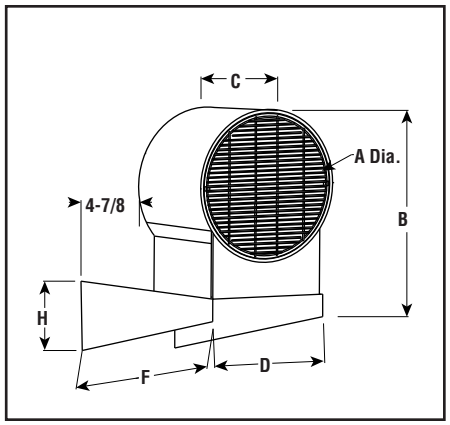

Ceiling Mounting Kit (25-50 kW) — Dimensions (Inches)

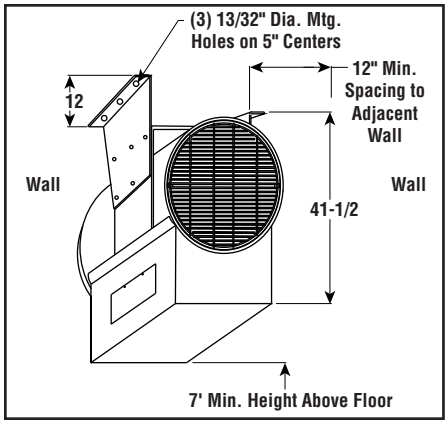

Wall Mounting Kit (25-50 kW) — Dimensions (Inches)

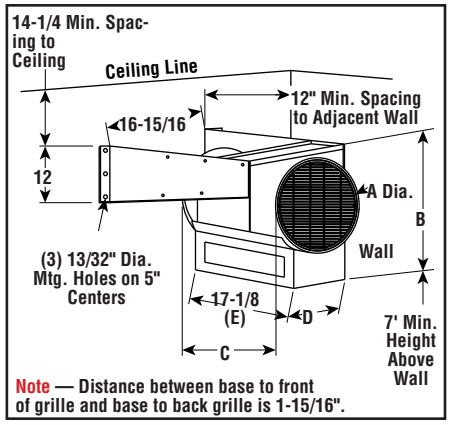

Dimensions (Inches)

Model	Dimensions (In.)								
	A	B	C	D	E	F	G	H	J
UB-23	10-3/8	13-1/2	8	6-7/16	3	11-3/8	9-7/16	6	4
UB-32	10-3/8	13-1/2	8	6-7/16	3	11-3/8	9-7/16	6	4
UB-502	13-5/8	17-3/16	13	8-7/16	7-9/16	15-9/16	11-7/8	8	6
UB-752	13-5/8	17-3/16	13	8-7/16	7-9/16	15-9/16	11-7/8	8	6
UB-1002	17-1/8	20-3/4	15-3/16	11-3/4	9-5/16	17-5/32	12-1/4	10	8
UB-1252	17-1/8	20-3/4	15-3/16	11-3/4	9-5/16	17-5/32	12-1/4	10	8
UB-1502	17-1/8	20-3/4	15-3/16	11-3/4	9-5/16	17-5/32	12-1/4	10	8
UB-2002	17-1/8	20-3/4	15-3/16	11-3/4	9-5/16	17-5/32	12-1/4	10	8
UB-2502	17-1/8	23-5/16	21	14	17-1/8	17-5/32	18-15/16	10	8
UB-3002	17-1/8	23-5/16	21	14	17-1/8	17-5/32	18-15/16	10	8
UB-3502	21-1/8	27-5/16	21	17-7/16	17-1/8	17-5/32	22-15/16	10	8
UB-4002	21-1/8	27-5/16	21	17-7/16	17-1/8	17-5/32	22-15/16	10	8
UB-4502	21-1/8	27-5/16	21	17-7/16	17-1/8	17-5/32	22-15/16	10	8
UB-5002	21-1/8	27-5/16	21	17-7/16	17-1/8	17-5/32	22-15/16	10	8

UB High Capacity Horizontal Blower Heater *(cont'd.)*

Electrical (60 Hz)				Motor					Air Delivery				Ordering			
kW	Volts	Phase	Amps	Volts	Phase	HP	RPM	CFM	FPM	Temp. Rise (°F)	Horiz. Throw (Ft.)	Mtg. Height (Ft.)	Model	Stock	PCN	Wt. (Lbs.)
2	120	1	16.7	115	1	1/15	1,550	316	657	21	10	8	**UB-23**	**S**	**261403**	13.5
2	208	1	9.6	208	1	1/15	1,550	316	657	21	10	8	**UB-23**	**S**	**261411**	13.5
2	240	1	8.3	230	1	1/15	1,550	316	657	21	10	8	**UB-23**	**S**	**261420**	13.5
3	120	1	25	115	1	1/15	1,550	316	657	31	10	8	**UB-32**	**S**	**261438**	13.5
3	208	1	14.4	208	1	1/15	1,550	316	657	31	10	8	**UB-32**	**S**	**261446**	13.5
3	240	1	12.5	230	1	1/15	1,550	316	657	31	10	8	**UB-32**	**S**	**261454**	13.5
5	120	1	41.7	115	1	1/15	1,050	405	430	40	12-1/2	8	UB-502	NS	261462	43
5	208	1	24	208	1	1/15	1,050	405	430	40	12-1/2	8	**UB-502**	**S**	**261489**	43
5	240	1	20.8	230	1	1/15	1,050	405	430	40	12-1/2	8	**UB-502**	**S**	**261500**	43
5	550[1]	3	5.3	230	1	1/15	1,050	405	430	40	12-1/2	8	UB-502	NS	285368	43
5	240	1	20.8	230	1	1/15	1,050	405	430	40	12-1/2	8	UB-502R	NS	264250	43
5	550[1]	3	5.3	115	1	1/15	1,050	405	430	40	12-1/2	8	UB-502	AS	266685	43
5	208	3	13.9	208	1	1/15	1,050	405	430	40	12-1/2	8	**UB-502**	**S**	**261497**	43
5	240	3	12	230	1	1/15	1,050	405	430	40	12-1/2	8	**UB-502**	**S**	**261518**	43
5	240	3	12	230	1	1/15	1,050	405	430	40	12-1/2	8	UB-502R	NS	269755	43
5	480	1	10.4	115	1	1/15	1,050	405	430	40	12-1/2	8	UB-502	AS	261526	43
5	480	1	10.4	230	1	1/15	1,050	405	430	40	12-1/2	8	UB-502	AS	269114	43
5	480	3	6	115	1	1/15	1,050	405	430	40	12-1/2	8	**UB-502**	**S**	**261534**	43
5	480	3	6	115	1	1/15	1,050	405	430	40	12-1/2	8	**UB-502T**	**S**	**269704**	51
5	480	3	6	230	1	1/15	1,050	405	430	40	12-1/2	8	UB-502	NS	265199	43
5	480	3	6	115	1	1/15	1,050	405	430	40	12-1/2	8	UB-502R	NS	264268	43
5	480	3	6	230	1	1/15	1,050	405	430	40	12-1/2	8	**UB-502T**	**S**	**264233**	51
7.5	208	1	36.1	208	1	1/15	1,050	590	640	37	13	8	UB-752	NS	261569	43
7.5	208	3	20.8	208	1	1/15	1,050	590	640	37	13	8	**UB-752**	**S**	**261577**	43
7.5	240	1	31.3	230	1	1/15	1,050	590	640	37	13	8	**UB-752**	**S**	**261585**	43
7.5	240	3	18.1	230	1	1/15	1,050	590	640	37	13	8	UB-752	AS	261593	43
7.5	240	3	18.1	230	1	1/15	1,050	590	640	37	13	8	UB-752R	NS	264276	43
7.5	480	1	15.6	115	1	1/15	1,050	590	640	37	13	8	UB-752	AS	261606	43
7.5	480	1	15.6	230	1	1/15	1,050	590	640	37	13	8	UB-752	AS	269122	43
7.5	480	3	9	115	1	1/15	1,050	590	640	37	13	8	**UB-752**	**S**	**261614**	43
7.5	480	3	9	230	1	1/15	1,050	590	640	37	13	8	UB-752	AS	265228	43
7.5	480	3	9	230	1	1/15	1,050	590	640	37	13	8	UB-752R	AS	264292	43
7.5	480	3	9	115	1	1/15	1,050	590	640	37	13	8	**UB-752T**	**S**	**265324**	51
7.5	480	3	9	115	1	1/15	1,050	590	640	37	13	8	UB-752R	AS	264284	43
7.5	480	3	9	230	1	1/15	1,050	590	640	37	13	8	**UB-752T**	**S**	**264241**	51
7.5	550[1]	3	7.9	115	1	1/15	1,050	590	640	37	13	8	UB-752	NS	266693	43
7.5	550	3	7.9	230	1	1/15	1,050	590	640	37	13	8	UB-752	AS	285376	43
10	208[1]	1	48.1	208	1	1/15	1,050	1,180	800	28	40	9	UB-1002	AS	261622	48
10	208	3	27.8	208	1	1/15	1,050	1,180	800	28	40	9	**UB-1002**	**S**	**261630**	48
10	240	1	41.7	230	1	1/15	1,050	1,180	800	28	40	9	**UB-1002**	**S**	**261649**	48
10	240	3	24.1	230	1	1/15	1,050	1,180	800	28	40	9	**UB-1002**	**S**	**261657**	48
10	480	1	20.1	115	1	1/15	1,050	1,180	800	28	40	9	UB-1002	AS	261665	48
10	480	3	12	115	1	1/15	1,050	1,180	800	28	40	9	**UB-1002**	**S**	**261673**	48
10	480	1	20.8	230	1	1/15	1,050	1,180	800	28	40	9	UB-1002	AS	265244	48
10	550[1]	3	10.5	115	1	1/15	1,050	1,180	800	28	40	9	UB-1002	AS	266706	48
10	480	3	12	230	1	1/15	1,050	1,180	800	28	40	9	**UB-1002**	**S**	**265236**	48
10	550[1]	3	10.5	230	1	1/15	1,050	1,180	800	28	40	9	UB-1002	AS	285350	48
10	480	3	12	115	1	1/15	1,050	1,180	800	28	40	9	**UB-1002T**	**S**	**277843**	56
10	480	3	12	230	1	1/15	1,050	1,180	800	28	40	9	**UB-1002T**	**S**	**277851**	56
12.5	208	3	34.7	208	1	1/15	1,050	1,180	800	36	40	9	UB-1252	AS	261681	48
12.5	240[1]	1	52.1	230	1	1/15	1,050	1,180	800	36	40	9	UB-1252	AS	261690	48
12.5	240	3	30.1	230	1	1/15	1,050	1,180	800	36	40	9	UB-1252	NS	261702	48
12.5	480	1	26	115	1	1/15	1,050	1,180	800	36	40	9	UB-1252	AS	261710	48
12.5	480	1	26	230	1	1/15	1,050	1,180	800	36	40	9	UB-1252	AS	265260	48
12.5	480	3	15.1	115	1	1/15	1,050	1,180	800	36	40	9	UB-1252	AS	261729	48
12.5	480	3	15.1	230	1	1/15	1,050	1,180	800	36	40	9	UB-1252	AS	265252	48
15	208	3	41.7	208	1	1/15	1,050	1,330	900	32	45	10	UB-1502	NS	261737	52
15	240[1]	1	62.5	230	1	1/15	1,050	1,330	900	32	45	10	UB-1502	AS	261745	52
15	240	3	36.1	230	1	1/15	1,050	1,330	900	32	45	10	**UB-1502**	**S**	**261753**	52
15	480	1	31.3	115	1	1/15	1,050	1,330	900	32	45	10	UB-1502	AS	261761	52
15	480	1	31.3	230	1	1/15	1,050	1,330	900	32	45	10	UB-1502	AS	265279	52
15	480	3	18.1	115	1	1/15	1,050	1,330	900	32	45	10	**UB-1502**	**S**	**261770**	52
15	480	3	18.1	230	1	1/15	1,050	1,330	900	32	45	10	UB-1502	AS	265295	52
15	480	3	18.1	115	1	1/15	1,050	1,330	900	32	45	10	**UB-1502T**	**S**	**266677**	60
15	550[1]	3	15.8	115	1	1/15	1,050	1,330	900	32	45	10	**UB-1502**	**S**	**264364**	52
19.9	240	3	47.9	230	1	1/15	1,050	1,330	900	42	45	11	UB-2002	NS	261809	52
20	480	1	41.7	115	1	1/15	1,050	1,330	900	42	45	11	UB-2002	AS	261817	52
20	480	1	41.7	230	1	1/15	1,050	1,330	900	42	45	11	UB-2002	NS	265287	52
20	480	3	24.1	115	1	1/15	1,050	1,330	900	42	45	11	**UB-2002**	**S**	**261825**	52
20	480	3	24.1	230	1	1/15	1,050	1,330	900	42	45	11	UB-2002	AS	265308	52
20	480	3	24.1	115	1	1/15	1,050	1,330	900	42	45	11	**UB-2002T**	**S**	**285384**	60
20	550[1]	3	21	115	1	1/15	1,050	1,330	900	42	45	11	**UB-2002**	**S**	**264372**	52

UB High Capacity Horizontal Blower Heater *(cont'd.)*

Electrical (60 Hz)				Motor					Air Delivery				Ordering			
kW	Volts	Phase	Amps	Volts	Phase	HP	RPM	CFM	FPM	Temp. Rise (°F)	Horiz. Throw (Ft.)	Mtg. Height (Ft.)	Model	Stock	PCN	Wt. (Lbs.)
25	240	3	60.2	115	1	1/3	1,550	1,300	825	64	48	12	UB-2502	NS	332558	185
25	240	3	60.2	115	1	1/3	1,550	1,300	825	64	48	12	UB-2502	NS	332566	185
25	240	3	60.2	230	1	1/3	1,550	1,300	825	64	48	12	UB-2502	NS	332574	185
25	240	3	60.2	230	1	1/3	1,550	1,300	825	64	48	12	UB-2502	NS	332582	185
25	480	3	30.1	115	1	1/3	1,550	1,300	825	64	48	12	UB-2502	NS	332590	185
25	480	1	52.1	115	1	1/3	1,550	1,300	825	64	48	12	UB-2502	NS	332603	185
25	480	1	52.1	230	1	1/3	1,550	1,300	825	64	48	12	UB-2502	NS	332611	185
25	480	1	52.1	230	1	1/3	1,550	1,300	825	64	48	12	UB-2502	NS	332620	185
25	480	1	52.1	115	1	1/3	1,550	1,300	825	64	48	12	UB-2502	NS	332638	185
25	480	3	30.1	115	1	1/3	1,550	1,300	825	64	48	12	UB-2502	NS	332646	185
25	480	3	30.1	230	1	1/3	1,550	1,300	825	64	48	12	UB-2502	NS	332654	185
25	480	3	30.1	230	1	1/3	1,550	1,300	825	64	48	12	UB-2502	NS	332662	185
25	480	3	30.1	460	3	1/3	1,725	1,450	920	57	48	12	UB-2502	NS	332670	185
25	480	3	30.1	460	3	1/3	1,725	1,450	920	57	48	12	**UB-2502**	**S**	**332689**	185
25	480	3	30.1	115	1	1/3	1,550	1,300	825	64	48	12	UB-2502	NS	332697	185
25	550	3	26.3	115	1	1/3	1,550	1,300	825	64	48	12	UB-2502	NS	332700	185
25	550	3	26.3	230	1	1/3	1,550	1,300	825	64	48	12	UB-2502	NS	332718	185
25	550	3	26.3	230	1	1/3	1,550	1,300	825	64	48	12	UB-2502	NS	332726	185
25	575	3	26.3	115	1	1/3	1,550	1,300	825	64	48	12	UB-2502	NS	332734	185
25	575	3	26.3	115	1	1/3	1,550	1,300	825	64	48	12	UB-2502	NS	332742	185
25	575	3	26.3	230	1	1/3	1,550	1,300	825	64	48	12	UB-2502	NS	332750	185
25	575	3	26.3	230	1	1/3	1,550	1,300	825	64	48	12	UB-2502	NS	332769	185
25	600	3	24.1	115	1	1/3	1,550	1,300	825	64	48	12	UB-2502	NS	332777	185
25	600	3	24.1	115	1	1/3	1,550	1,300	825	64	48	12	UB-2502	NS	332785	185
25	600	3	24.1	230	1	1/3	1,550	1,300	825	64	48	12	UB-2502	NS	332793	185
25	600	3	24.1	230	1	1/3	1,550	1,300	825	64	48	12	UB-2502	NS	332806	185
30	240	3	72.3	115	1	1/3	1,550	1,300	825	77	48	13	UB-3002	NS	332814	185
30	240	3	72.3	115	1	1/3	1,550	1,300	825	77	48	13	UB-3002	NS	332822	185
30	240	3	72.3	230	1	1/3	1,550	1,300	825	77	48	13	UB-3002	NS	332830	185
30	240	3	72.3	230	1	1/3	1,550	1,300	825	77	48	13	UB-3002	NS	332849	185
30	480	1	62.5	115	1	1/3	1,550	1,300	825	77	48	13	UB-3002	NS	332857	185
30	480	1	62.5	115	1	1/3	1,550	1,300	825	77	48	13	UB-3002	NS	332865	185
30	480	1	62.5	230	1	1/3	1,550	1,300	825	77	48	13	UB-3002	NS	332873	185
30	480	1	62.5	230	1	1/3	1,550	1,300	825	77	48	13	UB-3002	NS	332881	185
30	480	3	36.1	115	1	1/3	1,550	1,300	825	77	48	13	UB-3002	NS	332890	185
30	480	3	36.1	115	1	1/3	1,550	1,300	825	77	48	13	UB-3002	NS	332902	185
30	480	3	36.1	230	1	1/3	1,550	1,300	825	77	48	13	UB-3002	NS	332910	185
30	480	3	36.1	230	1	1/3	1,550	1,300	825	77	48	13	UB-3002	NS	332929	185
30	480	3	36.1	460	3	1/3	1,725	1,450	920	69	48	13	UB-3002	NS	332937	185
30	480	3	36.1	460	3	1/3	1,725	1,450	920	69	48	13	**UB-3002**	**S**	**332945**	185
30	550	3	31.5	115	1	1/3	1,550	1,300	825	77	48	13	UB-3002	NS	332953	185
30	550	3	31.5	115	1	1/3	1,550	1,300	825	77	48	13	UB-3002	NS	332961	185
30	550	3	31.5	230	1	1/3	1,550	1,300	825	77	48	13	UB-3002	NS	332970	185
30	550	3	31.5	230	1	1/3	1,550	1,300	825	77	48	13	UB-3002	NS	332988	185
30	575	3	30.2	115	1	1/3	1,550	1,300	825	77	48	13	UB-3002	NS	332996	185
30	575	3	30.2	115	1	1/3	1,550	1,300	825	77	48	13	UB-3002	NS	333008	185
30	575	3	30.2	230	1	1/3	1,550	1,300	825	77	48	13	UB-3002	NS	333016	185
30	575	3	30.2	230	1	1/3	1,550	1,300	825	77	48	13	UB-3002	NS	333024	185
30	600	3	28.9	115	1	1/3	1,550	1,300	825	77	48	13	UB-3002	NS	333032	185
30	600	3	28.9	115	1	1/3	1,550	1,300	825	77	48	13	UB-3002	NS	333040	185
30	600	3	28.9	230	1	1/3	1,550	1,300	825	77	48	13	UB-3002	NS	333059	185
30	600	3	28.9	230	1	1/3	1,550	1,300	825	77	48	13	UB-3002	NS	333067	185
35	240	3	84.3	230	1	1/3	1,550	2,500	1,040	47	54	14	UB-3502	NS	333075	210
35	240	3	84.3	230	1	1/3	1,550	2,500	1,040	47	54	14	UB-3502	NS	333083	210
35	480	1	72.9	115	1	1/3	1,550	2,500	1,040	47	54	14	UB-3502	NS	333091	210
35	480	1	72.9	115	1	1/3	1,550	2,500	1,040	47	54	14	UB-3502	NS	333104	210
35	480	1	72.9	230	1	1/3	1,550	2,500	1,040	47	54	14	UB-3502	NS	333112	210
35	480	1	72.9	230	1	1/3	1,550	2,500	1,040	47	54	14	UB-3502	NS	333120	210
35	480	3	42.2	115	1	1/3	1,550	2,500	1,040	47	54	14	UB-3502	NS	333139	210
35	480	3	42.2	115	1	1/3	1,550	2,500	1,040	47	54	14	UB-3502	NS	333147	210
35	480	3	42.2	230	1	1/3	1,550	2,500	1,040	47	54	14	UB-3502	NS	333155	210
35	480	3	42.2	230	1	1/3	1,550	2,500	1,040	47	54	14	UB-3502	NS	333163	210
35	480	3	42.2	460	3	1/3	1,725	2,800	1,165	42	54	14	UB-3502	NS	333171	210
35	480	3	42.2	460	3	1/3	1,725	2,800	1,165	42	54	14	**UB-3502**	**S**	**333180**	210
35	550	3	36.8	115	1	1/3	1,550	2,500	1,040	47	54	14	UB-3502	NS	333198	210
35	550	3	36.8	115	1	1/3	1,550	2,500	1,040	47	54	14	UB-3502	NS	333200	210
35	550	3	36.8	230	1	1/3	1,550	2,500	1,040	47	54	14	UB-3502	NS	333219	210
35	550	3	36.8	230	1	1/3	1,550	2,500	1,040	47	54	14	UB-3502	NS	333227	210
35	575	3	35.2	115	1	1/3	1,550	2,500	1,040	47	54	14	UB-3502	NS	333235	210
35	575	3	35.2	115	1	1/3	1,550	2,500	1,040	47	54	14	UB-3502	NS	333243	210
35	575	3	35.2	230	1	1/3	1,550	2,500	1,040	47	54	14	UB-3502	NS	333251	210
35	575	3	35.2	230	1	1/3	1,550	2,500	1,040	47	54	14	UB-3502	NS	333260	210
35	600	3	33.7	115	1	1/3	1,550	2,500	1,040	47	54	14	UB-3502	NS	333278	210

UB High Capacity Horizontal Blower Heater *(cont'd.)*

Electrical (60 Hz)				Motor					Air Delivery				Ordering			
kW	Volts	Phase	Amps	Volts	Phase	HP	RPM	CFM	FPM	Temp. Rise (°F)	Horiz. Throw (Ft.)	Mtg. Height (Ft.)	Model	Stock	PCN	Wt. (Lbs.)
35	600	3	33.7	115	1	1/3	1,550	2,500	1,040	47	54	14	UB-3502	NS	333286	210
35	600	3	33.7	230	1	1/3	1,550	2,500	1,040	47	54	14	UB-3502	NS	333294	210
35	600	3	33.7	230	1	1/3	1,550	2,500	1,040	47	54	14	UB-3502	NS	333307	210
40	480	1	83.3	115	1	1/3	1,550	2,500	1,040	53	54	15	UB-4002	NS	333315	210
40	480	1	83.3	115	1	1/3	1,550	2,500	1,040	53	54	15	UB-4002	NS	333323	210
40	480	1	83.3	230	1	1/3	1,550	2,500	1,040	53	54	15	UB-4002	NS	333331	210
40	480	1	83.3	230	1	1/3	1,550	2,500	1,040	53	54	15	UB-4002	NS	333340	210
40	480	3	48.2	115	1	1/3	1,550	2,500	1,040	53	54	15	UB-4002	NS	333358	210
40	480	3	48.2	115	1	1/3	1,550	2,500	1,040	53	54	15	UB-4002	NS	333366	210
40	480	3	48.2	230	1	1/3	1,550	2,500	1,040	53	54	15	UB-4002	NS	333374	210
40	480	3	48.2	230	1	1/3	1,500	2,500	1,040	53	54	15	UB-4002	NS	333382	210
40	480	3	48.2	460	3	1/3	1,725	2,800	1,165	48	54	15	UB-4002	NS	333390	210
40	480	3	48.2	460	3	1/3	1,725	2,800	1,165	48	54	15	**UB-4002**	**S**	**333403**	210
40	550	3	42	115	1	1/3	1,550	2,500	1,040	53	54	15	UB-4002	NS	333411	210
40	550	3	42	115	1	1/3	1,550	2,500	1,040	53	54	15	UB-4002	NS	333420	210
40	550	3	42	230	1	1/3	1,550	2,500	1,040	53	54	15	UB-4002	NS	333438	210
40	550	3	42	230	1	1/3	1,550	2,500	1,040	53	54	15	UB-4002	NS	333446	210
40	575	3	40.2	115	1	1/3	1,550	2,500	1,040	53	54	15	UB-4002	NS	333454	210
40	575	3	40.2	115	1	1/3	1,550	2,500	1,040	53	54	15	UB-4002	NS	333462	210
40	575	3	40.2	230	1	1/3	1,550	2,500	1,040	53	54	15	UB-4002	NS	333470	210
40	575	3	40.2	230	1	1/3	1,550	2,500	1,040	53	54	15	UB-4002	NS	333489	210
40	600	3	38.5	115	1	1/3	1,550	2,500	1,040	53	54	15	UB-4002	NS	333497	210
40	600	3	38.5	115	1	1/3	1,550	2,500	1,040	53	54	15	UB-4002	NS	333500	210
40	600	3	38.5	230	1	1/3	1,550	2,500	1,040	53	54	15	UB-4002	NS	333518	210
40	600	3	38.5	230	1	1/3	1,550	2,500	1,040	53	54	15	UB-4002	NS	333526	210
45	480	1	93.8	230	1	1/3	1,550	2,500	1,040	60	54	17	UB-4502	NS	333534	210
45	480	1	93.8	230	1	1/3	1,550	2,500	1,040	60	54	17	UB-4502	NS	333542	210
45	480	3	54.2	115	1	1/3	1,550	2,500	1,040	60	54	17	UB-4502	NS	333550	210
45	480	3	54.2	115	1	1/3	1,550	2,500	1,040	60	54	17	UB-4502	NS	333569	210
45	480	3	54.2	230	1	1/3	1,550	2,500	1,040	60	54	17	UB-4502	NS	333577	210
45	480	3	54.2	230	1	1/3	1,550	2,500	1,040	60	54	17	UB-4502	NS	333585	210
45	480	3	54.2	460	3	1/3	1,725	2,800	1,165	54	54	17	UB-4502	NS	333593	210
45	480	3	54.2	460	3	1/3	1,725	2,800	1,165	54	54	17	UB-4502	NS	333606	210
45	550	3	47.3	115	1	1/3	1,550	2,500	1,040	60	54	17	UB-4502	NS	333614	210
45	550	3	47.3	115	1	1/3	1,550	2,500	1,040	60	54	17	UB-4502	NS	333622	210
45	550	3	47.3	230	1	1/3	1,550	2,500	1,040	60	54	17	UB-4502	NS	333630	210
45	550	3	47.3	230	1	1/3	1,550	2,500	1,040	60	54	17	UB-4502	NS	333649	210
45	575	3	45.2	115	1	1/3	1,550	2,500	1,040	60	54	17	UB-4502	NS	333657	210
45	575	3	45.2	115	1	1/3	1,550	2,500	1,040	60	54	17	UB-4502	NS	333665	210
45	575	3	45.2	230	1	1/3	1,550	2,500	1,040	60	54	17	UB-4502	NS	333673	210
45	575	3	45.2	230	1	1/3	1,550	2,500	1,040	60	54	17	UB-4502	NS	333681	210
45	600	3	43.4	115	1	1/3	1,550	2,500	1,040	60	54	17	UB-4502	NS	333690	210
45	600	3	43.4	115	1	1/3	1,550	2,500	1,040	60	54	17	UB-4502	NS	333702	210
45	600	3	43.4	230	1	1/3	1,550	2,500	1,040	60	54	17	UB-4502	NS	333710	210
45	600	3	43.4	230	1	1/3	1,550	2,500	1,040	60	54	17	UB-4502	NS	333729	210
50	480	3	60.2	115	1	1/3	1,550	2,500	1,040	67	54	17	UB-5002	NS	333737	210
50	480	3	60.2	115	1	1/3	1,550	2,500	1,040	67	54	17	UB-5002	NS	333745	210
50	480	3	60.2	230	1	1/3	1,550	2,500	1,040	67	54	17	UB-5002	NS	333753	210
50	480	3	60.2	230	1	1/3	1,550	2,500	1,040	67	54	17	UB-5002	NS	333761	210
50	480	3	60.2	460	3	1/3	1,725	2,800	1,165	60	54	17	UB-5002	NS	333770	210
50	480	3	60.2	460	3	1/3	1,725	2,800	1,165	60	54	17	**UB-5002**	**S**	**333788**	210
50	550	3	52.5	115	1	1/3	1,550	2,500	1,040	67	54	17	UB-5002	NS	333796	210
50	550	3	52.5	115	1	1/3	1,550	2,500	1,040	67	54	17	UB-5002	NS	333809	210
50	550	3	52.5	230	1	1/3	1,550	2,500	1,040	67	54	17	UB-5002	NS	333817	210
50	550	3	52.5	230	1	1/3	1,550	2,500	1,040	67	54	17	UB-5002	NS	333825	210
50	575	3	50.3	115	1	1/3	1,550	2,500	1,040	67	54	17	UB-5002	NS	333833	210
50	575	3	50.3	115	1	1/3	1,550	2,500	1,040	67	54	17	UB-5002	NS	333841	210
50	575	3	50.3	230	1	1/3	1,550	2,500	1,040	67	54	17	UB-5002	NS	333850	210
50	575	3	50.3	230	1	1/3	1,550	2,500	1,040	67	54	17	UB-5002	NS	333868	210
50	600	3	48.2	115	1	1/3	1,550	2,500	1,040	67	54	17	UB-5002	NS	333876	210
50	600	3	48.2	115	1	1/3	1,550	2,500	1,040	67	54	17	UB-5002	NS	333884	210
50	600	3	48.2	230	1	1/3	1,550	2,500	1,040	67	54	17	UB-5002	NS	333892	210
50	600	3	48.2	230	1	1/3	1,550	2,500	1,040	67	54	17	UB-5002	NS	333905	210

Stock Status: **S** = stock AS = assembly stock NS = non-stock
To Order—Specify model, PCN, kW, volts, phase and quantity.

1. Not UL Listed.

Other Note — Up to 600V available, contact your Local Chromalox Sales office.

VUH

Vertical Delivery Blower Heater

- 5 - 50 kW
- 17,060 - 170,600 Btuh
- 208, 240, 277 and 480 Volt
- 1 or 3 Phase
- Diffusers Optional

Description

Versatile, high performance VUH heaters can be used for complete primary, supplementary or dual system heating applications in all types of commercial and industrial applications. They direct warm air downward, and are particularly applicable in high bay industrial buildings where columns, towering machinery or warehouse stock would obstruct good horizontal movement of air. Four types of optional diffuser designs can be used to produce a variety of air distribution patterns.

Dimensions (Inches)

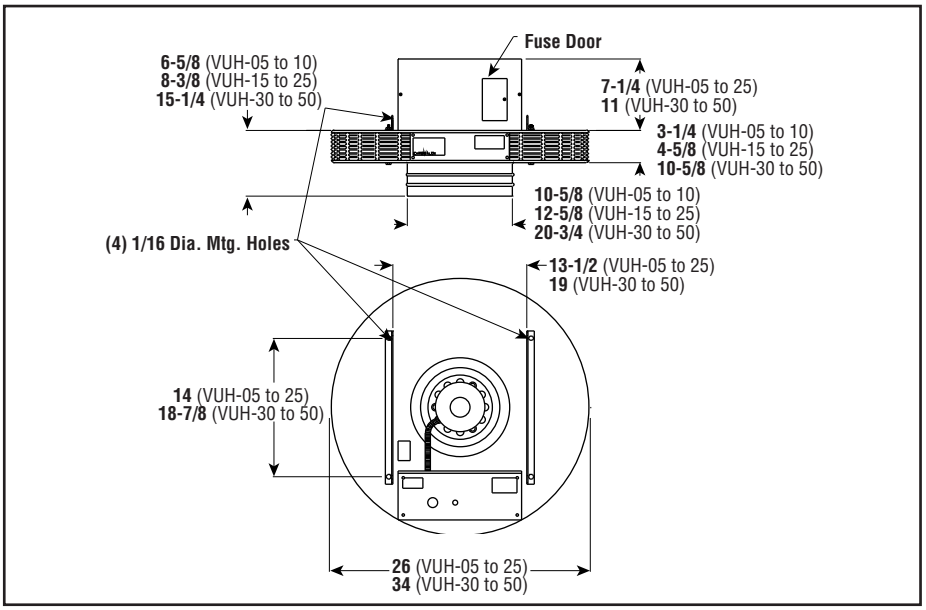

Applications

- Shipping and Receiving Areas
- Power Generating Stations
- Aircraft Hangers
- Warehouses
- Garages
- High Bay Areas

Features

Sub-divided Circuits with Individual Fuse Protection — Standard on all heaters with a total current draw of 48 Amps or greater and are electrically balanced. The fuse compartment is conveniently located for easy access.

Integral 120V Control Transformer — Standard on 480V models, eliminates the need for an external control source (24V optional).

Heavy Duty Magnetic Contactors — No external contactors are needed; integral, 3-pole, magnetic contactors are standard on all models.

Thermal Cutouts open the control circuit and disconnect power to the heating elements if overheating occurs. **Automatic Reset** allows the control circuit to reclose and restore power when the temperature returns to normal levels.

Suspension Mount with Hangers or Brackets — VUH heaters have top angle brackets with four (4) mounting holes for suspension mounting of heaters from ceiling with hangers, or rigid angle brackets. The junction box/control compartment is located on the top housing for overhead wiring.

Optional Features

Diffusers — Radial, Cone, Louver and Anemostat diffusers are available to direct heat coverage.

Fan Only Relay

Advantages

- Clean and Reliable
- Easy Maintenance
- Built-in Controls
- Attractive Appearance

VUH
Vertical Delivery Blower Heater *(cont'd.)*

Construction

Cabinet — Heavy 18 gauge steel, phosphate undercoated for corrosion resistance.

Finish — An almond powder coat provides a good, clean appearance complementary to modern structures.

Metal Sheath Fintube® Heating Elements — The electric heat bank - Chromalox patented metal sheath Fintube® heating elements. They are shock proof! Heat radiation fins are corrosion-resistant copper-clad steel, furnace brazed to the tubular heating elements to assure superior heat transfer. They don't come loose! Wide spacing prevents clogging. Air is evenly drawn across the circumferential elements preventing hot spots and prolonging element life.

Fan Motor stays cool. A baffle isolates it from the heat radiation of the heating elements. VUH motors run smoothly with low vibration and noise. They're mounted with vibration isolators. Thermal overload protection includes automatic reset. (These totally enclosed units operate on the same line power as the heating bank. Connect direct to the power contactor...no need for separate internal or external motor control components.)

Dynamically Balanced Fan for smooth, quiet operation. Blade pitch is carefully selected so that the volume of air moved results in the optimum discharge air temperature.

Specifications and Ordering Information

Electrical (60 Hz)				Motor				Air Delivery				Ordering			
kW	Volts	Ckt & Phase	Amps	Volts	Phase	HP	RPM	CFM	FPM	Outlet Temp. (°F)	Mtg. Height (Ft.)	Model	Stock	PCN	Wt. (Lbs.)
5	208	1 - 1/3	24/14	208	1	1/25	1,550	450	730	102	10	**VUH-05-83**	**S**	**300548**	48
5	240	1 - 1/3	21/12	240	1	1/25	1,550	450	730	102	10	**VUH-05-23**	**S**	**300556**	48
5	277	1 - 1	18	277	1	1/25	1,550	450	730	102	10	**VUH-05-71**	**S**	**300564**	48
5	480	1 - 3	6	480	1	1/25	1,550	450	730	102	10	**VUH-05-43**	**S**	**300572**	48
7.5	208	1 - 1/3	36/21	208	1	1/25	1,550	550	880	102	12	**VUH-07-83**	**S**	**300580**	48
7.5	240	1 - 1/3	32/18	240	1	1/25	1,550	550	880	102	12	**VUH-07-23**	**S**	**300599**	48
7.5	277	1 - 1	27	277	1	1/25	1,550	550	880	102	12	VUH-07-71	NS	300601	48
7.5	480	1 - 3	9	480	1	1/25	1,550	550	880	102	12	**VUH-07-43**	**S**	**300610**	48
9.8	208	1 - 1/3	42/27	208	1	1/25	1,550	712	1,160	104	14	**VUH-10-83**	**S**	**300628**	48
10	240	1 - 1/3	42/24	240	1	1/25	1,550	712	1,160	104	14	**VUH-10-23**	**S**	**300636**	48
10	277	1 - 1	36	277	1	1/25	1,550	712	1,160	104	14	VUH-10-71	NS	300644	48
10	480	1 - 3	12	480	1	1/25	1,550	712	1,160	104	14	**VUH-10-43**	**S**	**300652**	48
15	208	1 - 3	42	208	3	1/6	1,725	1,300	1,600	93	25	**VUH-15-83**	**S**	**300660**	85
15	240	1 - 3	36	240	3	1/6	1,725	1,300	1,600	93	25	**VUH-15-23**	**S**	**300679**	85
15	480	1 - 3	18	480	3	1/6	1,725	1,300	1,600	93	25	**VUH-15-43**	**S**	**300687**	85
19.5	240	1 - 3	47	240	3	1/6	1,725	1,300	1,600	104	23	**VUH-20-23**	**S**	**300695**	85
20	480	1 - 3	24	480	3	1/6	1,725	1,300	1,600	104	23	**VUH-20-43**	**S**	**300708**	85
25	480	1 - 3	30	480	3	1/6	1,725	1,300	1,600	115	20	**VUH-25-43**	**S**	**300716**	85
30	208	2 - 3	83	208	3	1/3	1,140	2,500	1,200	96	33	VUH-30-83	NS	300724	250
30	240	2 - 3	72	240	3	1/3	1,140	2,500	1,200	96	33	VUH-30-23	NS	300732	250
30	480	2 - 3	36	480	3	1/3	1,140	2,500	1,200	96	33	**VUH-30-43**	**S**	**300740**	250
38.5	240	2 - 3	93	240	3	1/3	1,140	2,500	1,200	108	30	VUH-40-23	NS	301110	250
39	480	2 - 3	47	480	3	1/3	1,140	2,500	1,200	108	30	**VUH-40-43**	**S**	**300759**	250
50	480	2 - 3	60	480	3	1/3	1,140	2,500	1,200	120	27	**VUH-50-43**	**S**	**300767**	250

Stock Status: **S** = stock AS = assembly stock NS = non-stock
To Order—Specify model, PCN, kW, volts, phase and quantity.

Notes —

A. VUH-05, 07 and 10 models 208 and 240V are factory wired for 3 phase operation and field convertible for 1 phase operation. Line and Amp ratings include motor Amps.

B. All stock 208 and 240V models have built-in contactors with 208/240V holding coils. All stock 277 and 480V models have built-in control transformer and contactors with 120V holding coil.

C. Fan only option is available for external control. Motor voltage is isolated through a motor relay which must be purchased separately. Control is pilot-duty 120V circuits. Optional heat recovery thermostat for economical recovery of stratified air may be used in conjunction with the fan only option by means of an ARR-219 thermostat. Thermostat to be mounted externally on the VUH junction box with capillary extended away from the heater to sense true ceiling air temperature.

D. All heaters are also available on special order with 24 or 120V relay holding coils with a built-in transformer. All models are also available with 24 or 120V relay holding coils for wiring to a separate 24 or 120V control circuit.

E. VUH-30, 40 and 50 models are equipped as standard with two integral relays. These heaters are shipped as standard for two-stage control but relay holding coil terminals may be jumpered in the field for single-stage control, if desired.

F. All fan motors are totally enclosed with thermal overload protection. 1/25 and 1/6 HP motors are all angle sleeve bearing type. 1/3 HP motors are ball bearing type.

G. Outlet temperature is based on 60°F entering air.

VUH Vertical Delivery Blower Heater *(cont'd.)*

Diffuser Selection & Heat Coverage

Without Diffuser

VUH heaters are used without a diffuser where a straight downflow air pattern is required. However, any diffuser can be added to the basic heater.

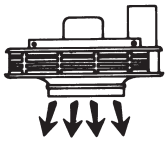

Radial

VUR increases floor coverage. Has adjustable fins which, when turned to a vertical position, direct air downward in a pattern tighter than that of a heater without a diffuser. The heater can be mounted 15 to 20% higher than a heater with no diffuser, and will still maintain the same coverage at floor level. Conversely, when the fins are tilted to a 45° angle, floor coverage of warmed air is up to 25% greater (than no diffuser) at relatively low mounting

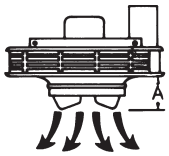

Cone

VUC permits low mounting of the heater. Throws air outward over large area rather than downward. Cone can be lowered or raised to change the air flow pattern.

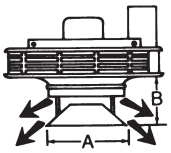

Louver

VUL permits directional (straight line) air flow such as in air curtain applications over doorways. Gives rectangular coverage. Louvers can be turned in either direction.

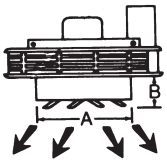

Anemostat

VUA "comfort" diffuser gives draft-free air movement at low mounting heights. Floor coverage is same as heaters with no diffusers.

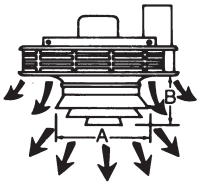

Diffuser — Specifications

Heater	Radial			Cone				Louver				Anemostat			
	Model	A	Wt. (Lbs.)	Model	A	B	Wt. (Lbs.)	Model	A	B	Wt. (Lbs.)	Model	A	B	Wt. (Lbs.)
VUH-05 to -10	VUR-ES	5	4	–	–	–	–	–	–	–	–	VUA-ES	17	5-7/8	4
VUH-05 to -15	–	–	–	VUC-S	16	13-1/4	3	VUL-S	16-1/8 sq	7-1/4	9	–	–	–	–
VUH-15	VUR-S	6-5/8	4	–	–	–	–	–	–	–	–	VUA-S	17-1/8	11-1/4	4
VUH-20 to -25	VUR-S	6-5/8	4	VUC-S	16	13-1/4	3	VUL-S	16-1/8 sq	7-1/4	9	VUA-S	19-1/4	11-1/4	4
VUH-30 to -50	VUR-L	9-1/2	8	VUC-L	22-1/2	16-7/8	7	VUL-L	22-1/8 sq	7-1/4	14	VUA-L	30-1/2	15-1/2	11

Mounting Heights & Floor Coverage (Approximate Dimensions in Feet)

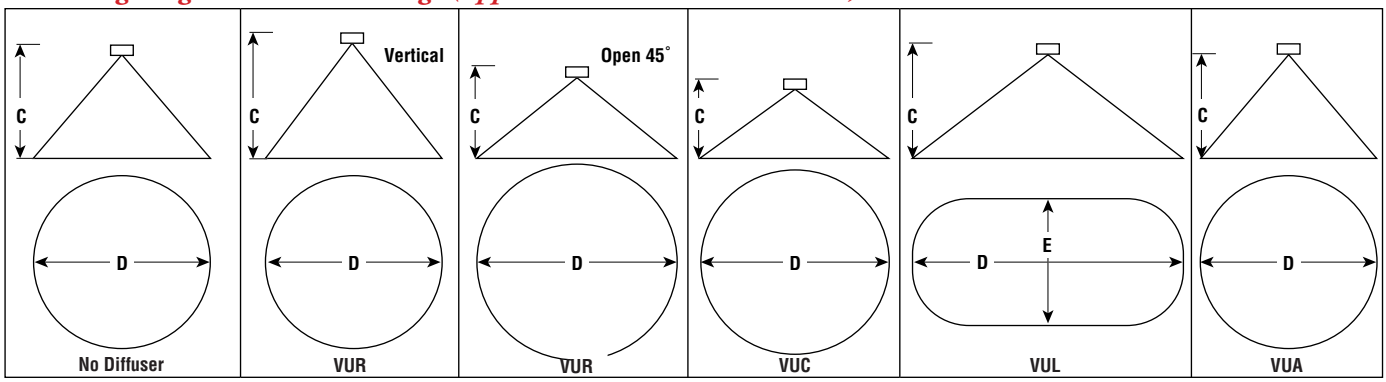

Heater	Dimensions (Ft.)												
	No Diffuser		VUR		VUR Open 45°		VUC		VUL			VUA	
	C	D	C	D	C	D	C	D	C	D	E	C	D
VUH-05	10	26	12	26	11	32	10	30	10	40	18	10	26
VUH-07	12	30	14	30	12.5	36	12	35	12	46	21	12	30
VUH-10	14	39	17	39	16	46	14	44	14	59	27	14	39
VUH-15	25	41	29	41	20	47	18	44	25	61	28	25	40
VUH-20	23	43	26.5	43	19	48	17	46	23	64	29	23	43
VUH-25	20	45	23	45	17	49	15	48	20	66	30	20	45
VUH-30	33	64	38	64	23	73	29	70	33	94	43	33	67
VUH-40	30	66	35	66	23	73	20	70	30	96	44	30	69
VUH-50	27	69	31	69	21	73	19	72	27	99	45	27	70

Notes — A. Mounting height and floor coverage data is approximate and depends upon the heater location and its surroundings, such as obstructions, drafts etc.
B. Specific location and mounting height will vary with the installation.

VUH

Vertical Delivery Blower Heater *(cont'd.)*

Diffuser Accessories — Specifications and Ordering Information

Model	Description	kW	Stock	PCN	Wt. (Lbs.)
VUR-ES	**Radial Diffuser**	**5-10**	**S**	**300775**	2
VUR-S	**Radial Diffuser**	**15-25**	**S**	**300783**	2
VUR-L	**Radial Diffuser**	**30-50**	**S**	**300791**	2
VUC-S	**Cone Diffuser**	**5-25**	**S**	**300804**	2
VUC-L	**Cone Diffuser**	**30-50**	**S**	**300812**	2
VUL-S	**Louver Diffuser**	**5-25**	**S**	**300820**	2
VUL-L	**Louver Diffuser**	**30-50**	**S**	**300839**	2
VUA-ES	Anemostat Diffuser	5-10	NS	300847	2
VUA-S	Anemostat Diffuser	15-25	NS	300855	2
VUA-L	Anemostat Diffuser	30-50	NS	300863	2

Stock Status: **S** = stock AS = assembly stock NS = non-stock
To Order—Specify model, PCN, kW, volts, phase and quantity.

Model Numbers

Vertical Unit Heater

Heating Elements

02	2.6 kW	**20**	20.0 kW
04	4.0 k W	**25**	25.0 kW
05	5.0 kW	**30**	30.0 kW
07	7.5 kW	**35**	35.0 kW
10	10.0 kW	**40**	40.0 kW
12	12.5 kW	**45**	45.0 kW
15	15.0 kW		

Heater Voltage and Phase

81	208V, 1 Phase	**71**	277V, 1 Phase
83	208V, 3 Phase	**43**	480V, 3 Phase
21	240V, 1 Phase	**63**	600V, 3 Phase
23	240V, 3 Phase		

Control

00	No Contactor(s)
30	24V Control Internal Transformer
31	24V Control Externally Supplied
32	120V Control Internal Transformer
33	120V Control Externally Supplied
34	208/240V Control Internally Supplied, No Transformer
35	277V Control Internally Supplied (Available only on 277 V Heaters)

Fan Relay

00	No Fan Relay
45	Fan Relay Provided

VUH 05 21 34 00 Typical Model Number

HD3D

Hose Down Corrosion Resistant Blower Heater

- **2 - 39 kW**
- **6,800 - 133,110 Btuh**
- **120, 208, 240, 277, 480 and 575 Volt**
- **1 & 3 Phase**
- **Built-in Controls**
- **Vertical or Horizontal Airflow**
- **Wall or Ceiling Mounted Configurations**

Selector Switch and Pilot Light

Advantages

Because it has an adjustable discharge grille to direct air flow, and can be wall or ceiling (plus swivel) mounted, the HD3D heater may be used in a variety of heating applications:

- Primary Heating
- Supplementary Heating
- Dual System Heating
- Spot Heating
- Entryway Air-Curtain Heating
- Freeze Protection

Description

This reliable, rugged, self-contained HD3D heater is an ideal heat source for freeze protection or comfort heat in dusty/dirty/corrosive non-hazardous environments. Standard HD3D heaters include low profile stainless steel wall/ceiling mounting brackets that can be used to mount directly to a wall for horizontal airflow perpendicular to the wall. These brackets can also be used to mount the heater directly to the ceiling for vertical airflow.

Applications

Waste Water Treatment Plants, Coal Handling Areas, Food Processing Plants, Foundries, Steel Mills, Cement Plants, Ships, Construction Sites, Car Washes, Swimming Pool Areas, Canneries, Hose Down (for cleaning). Corrosion Resistant for Harsh Environments and Dairies.

Dimensions (Inches)

kW	Volts	Phase	A	B	C
2.0 - 7.5	All	1, 3	13-1/2	24-1/2	15
10.0 - 20.0	All	1, 3	17-1/4	28	15-1/8
25.0 - 39.0	480, 575	3	21-1/4	32-1/4	19-1/2

Dimensions (Inches)

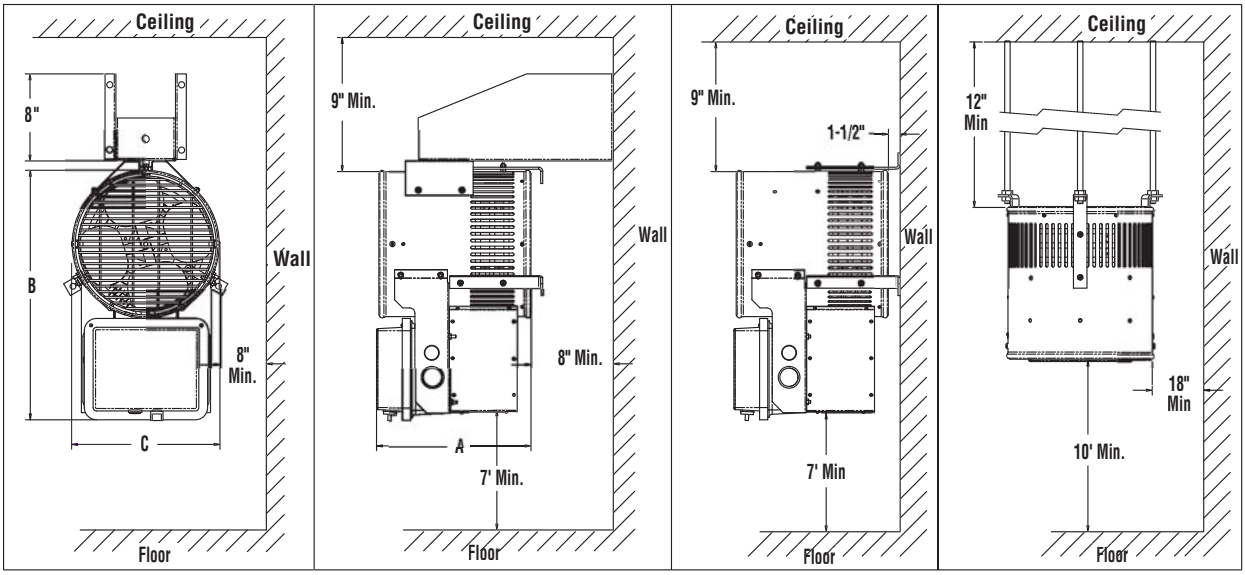

HD3D

Hose Down Corrosion Resistant Blower Heater *(cont'd.)*

Construction

Roll Formed Case is constructed of 20 gauge corrosion resistant type 304 stainless steel.

Adjustable Discharge Grille directs air flow up or down as needed.

NEMA 4X Control Enclosure houses the heater controls, contactors and control voltage transformer, easily accessible from front of heater.

Heating Elements — High quality, long-life, Stainless Steel Fintube® (type 316) offers maximum resistance to corrosion.

Totally Enclosed Motor — The motor is permanently lubricated, ball bearing type and is epoxy painted for moisture and corrosion resistance.

Dynamically Balanced Fan — Aluminum fan is epoxy coated and provides optimum air flow across the heating elements.

Features

Transformer provides a 120V control circuit (24V optional). Standard on all units except 2 kW and 3 kW, 120V.

Heavy Duty Contactors for heating circuit and motor are included. (Not furnished on 120V, 2 and 3 kW units)

Automatic Reset Thermal Cutout is provided for fast heat response and overheat protection.

Fan Time Delay Relay dissipates residual heat build-up after shutdown.

Low Profile Fixed Wall & Ceiling Mounting Bracket (Non Swiveling)

Optional Features

- Integral Thermostat*
  - 40˚F to 90˚F (This Thermostat Range Supplied Unless Otherwise Specified)
  - 55°F to 105°F
- Pilot Light*
  - Green Indicates Power On
- Selector Switch (3 position) — Heater On,* Off or Fan Only Operation for Heater
- Manual Reset Cutout
- Epoxy Painted Stainless Steel Case
- 24V Control Circuit

Accessories

Universal Swivel Wall & Ceiling Brackets

Ordering Information

Model	PCN	Used With	Stock Status
USB-1	**520604**	HD3D 200 to 750	**S**
USB-2	**520612**	HD3D 1000 to 2000	**S**
USB-3	**520620**	HD3D 2500 to 4000	**S**

External Drip Sheilds

Ordering Information

Model	PCN	Used With	Stock Status
HD3DS-1	**520639**	HD3D 200 to 750	**S**
HD3DS-2	**520647**	HD3D 1000 to 2000	**S**
HD3DS-3	**520655**	HD3D 2500 to 4000	**S**

Field Installable Disconnect Kit

The disconnect kit consists of a complete liquid tight assembly, including a 3-pole 48 Amp Switch, power terminal block and all the hardware to mount to the main heater enclosure. Positive action to remove all power from enclosure.

Ordering Information

Model	PCN	Used With	Stock Status
DS-50HD	**520663**	All	**S**

HD3D

Hose Down Corrosion Resistant Blower Heater *(cont'd.)*

Specifications and Ordering Information

Electrical (60 Hz)				Motor					Air Delivery				Ordering			
kW	Volts	Phase	Amps	Volts	Phase	HP	RPM	CFM	FPM	Temp. Rise (°F)	Horiz. Throw (Ft.)	Mtg. Height** (Ft.)	Model	Stock	PCN	Wt. (Lbs.)
2	120	1	16.7	115	1	1/15	1,050	405	430	21	12	7	HD3D-200	NS	520014	45
2	208	1	9.6	208	1	1/15	1,050	405	430	21	12	7	HD3D-200	NS	520022	45
2	240	1	8.3	240	1	1/15	1,050	405	430	21	12	7	HD3D-200	NS	520030	45
2	277	1	7.2	277	1	1/15	1,050	405	430	21	12	7	HD3D-200	NS	520049	45
3	120	1	25.0	115	1	1/15	1,050	405	430	31	12	7	HD3D-300	NS	520057	45
3	208	1	14.4	208	1	1/15	1,050	405	430	31	12	7	HD3D-300	NS	520065	45
3	240	1	12.5	240	1	1/15	1,050	405	430	31	12	7	HD3D-300	NS	520073	45
3	277	1	10.8	277	1	1/15	1,050	405	430	31	12	7	HD3D-300	NS	520081	45
5	208	1	24.0	208	1	1/15	1,050	405	430	40	12	7	HD3D-500	NS	520090	50
5	240	1	20.8	240	1	1/15	1,050	405	430	40	12	7	HD3D-500	NS	520102	50
5	277	1	18.1	277	1	1/15	1,050	405	430	40	12	7	HD3D-500	NS	520110	50
5	480	1	10.4	480	1	1/15	1,050	405	430	40	12	7	HD3D-500	NS	520129	50
5	208	3	13.9	208	1	1/15	1,050	405	430	40	12	7	HD3D-500	NS	520137	50
5	240	3	12.0	240	1	1/15	1,050	405	430	40	12	7	HD3D-500	NS	520145	50
5	480	3	6.0	480	1	1/15	1,050	405	430	40	12	7	**HD3D-500†**	**S**	**520153**	50
5	480	3	6.0	480	1	1/15	1,050	405	430	40	12	7	**HD3D-500 TSP*†**	**S**	**520161**	51
5	575	3	5.0	575	1	1/15	1,050	405	430	40	12	7	HD3D-500	NS	520170	50
7.5	208	1	36.1	208	1	1/15	1,050	590	640	37	13	7	HD3D-750	NS	520188	50
7.5	240	1	31.3	240	1	1/15	1,050	590	640	37	13	7	HD3D-750	NS	520196	50
7.5	277	1	27.1	277	1	1/15	1,050	590	640	37	13	7	HD3D-750	NS	520209	50
7.5	480	1	15.6	480	1	1/15	1,050	590	640	37	13	7	HD3D-750	NS	520217	50
7.5	208	3	20.8	208	1	1/15	1,050	590	640	37	13	7	HD3D-750	NS	520225	50
7.5	240	3	18.1	240	1	1/15	1,050	590	640	37	13	7	HD3D-750	NS	520233	50
7.5	480	3	9.0	480	1	1/15	1,050	590	640	37	13	7	**HD3D-750†**	**S**	**520241**	50
7.5	480	3	9.0	480	1	1/15	1,050	590	640	37	13	7	**HD3D-750 TSP*†**	**S**	**520250**	51
7.5	575	3	7.5	575	1	1/15	1,050	590	640	37	13	7	HD3D-750	NS	520268	50
10	240	1	41.7	240	1	1/15	1,050	1,180	800	28	40	7	HD3D-1000	NS	520276	60
10	277	1	36.1	277	1	1/15	1,050	1,180	800	28	40	7	HD3D-1000	NS	520284	60
10	480	1	20.8	480	1	1/15	1,050	1,180	800	28	40	7	HD3D-1000	NS	520292	60
10	208	3	27.8	208	1	1/15	1,050	1,180	800	28	40	7	HD3D-1000	NS	520305	60
10	240	3	24.1	240	1	1/15	1,050	1,180	800	28	40	7	HD3D-1000	NS	520313	60
10	480	3	12.0	480	1	1/15	1,050	1,180	800	28	40	7	**HD3D-1000†**	**S**	**520321**	60
10	480	3	12.0	480	1	1/15	1,050	1,180	800	28	40	7	**HD3D-1000 TSP*†**	**S**	**520330**	61
10	575	3	10.1	575	1	1/15	1,050	1,180	800	28	40	7	HD3D-1000	NS	520348	60
12.5	277	1	45.1	277	1	1/15	1,050	1,180	800	36	40	7	HD3D-1250	NS	520356	60
12.5	480	1	26.0	480	1	1/15	1,050	1,180	800	36	40	7	HD3D-1250	NS	520364	60
12.5	208	3	34.7	208	1	1/15	1,050	1,180	800	36	40	7	HD3D-1250	NS	520372	60
12.5	240	3	30.1	240	1	1/15	1,050	1,180	800	36	40	7	HD3D-1250	NS	520380	60
12.5	480	3	15.1	480	1	1/15	1,050	1,180	800	36	40	7	HD3D-1250	NS	520399	60
12.5	575	3	12.6	575	1	1/15	1,050	1,180	800	36	40	7	HD3D-1250	NS	520401	60
15	480	1	31.3	480	1	1/15	1,050	1,330	900	32	45	7	HD3D-1500	NS	520410	60
15	208	3	41.7	208	1	1/15	1,050	1,330	900	32	45	7	HD3D-1500	NS	520428	60
15	240	3	36.1	240	1	1/15	1,050	1,330	900	32	45	7	HD3D-1500	NS	520436	60
15	480	3	18.1	480	1	1/15	1,050	1,330	900	32	45	7	**HD3D-1500†**	**S**	**520444**	60
15	480	3	18.1	480	1	1/15	1,050	1,330	900	32	45	7	**HD3D-1500 TSP*†**	**S**	**520452**	61
15	575	3	15.1	575	1	1/15	1,050	1,330	900	32	45	7	HD3D-1500	NS	520460	60
19.5	240	3	47.0	240	1	1/15	1,050	1,330	900	42	45	7	HD3D-2000	NS	520479	60
20	480	1	41.7	480	1	1/15	1,050	1,330	900	42	45	7	HD3D-2000	NS	520487	60
20	480	3	24.1	480	1	1/15	1,050	1,330	900	42	45	7	**HD3D-2000†**	**S**	**520495**	60
20	480	3	24.1	480	1	1/15	1,050	1,330	900	42	45	7	**HD3D-2000 TSP*†**	**S**	**520508**	61
20	575	3	20.1	575	1	1/15	1,050	1,330	900	42	45	7	HD3D-2000	NS	520516	60
25	480	3	30.1	480	3	1/3	1,725	2,700	1110	31	48	7	**HD3D-2500**	**S**	**520524**	80
25	575	3	25.1	575	3	1/3	1,550	1,800	740	42	48	7	HD3D-2500	NS	520532	80
30	480	3	36.1	480	3	1/3	1,725	2,700	1110	37	48	7	**HD3D-3000**	**S**	**520540**	80
30	575	3	30.2	575	3	1/3	1,550	1,800	740	50	48	7	HD3D-3000	NS	520559	80
35	480	3	42.1	480	3	1/3	1,725	2,700	1110	43	48	7	HD3D-3500	NS	520567	80
35	575	3	35.2	575	3	1/3	1,550	1,800	740	57	48	7	HD3D-3500	NS	520575	80
39	480	3	47.0	480	3	1/3	1,725	2,700	1110	50	48	7	**HD3D-4000**	**S**	**520583**	80
39	575	3	39.2	575	3	1/3	1,550	1,800	740	65	48	7	HD3D-4000	NS	520591	80

Stock Status: **S** = stock AS = assembly stock NS = non-stock
To Order—Specify model, PCN, kW, volts, phase and quantity.

***HD3D Series heaters with TSP suffix includes thermostat, selector switch and pilot light.**
†Models can be field re-wired for use on single phase
****Mounting height if mounted for horizontal airflow. For vertical mounting, minimum height is 10'.**

CXH-A

Explosion Proof Blower Heater for Hazardous Locations

- **3 - 35 kW**
- **10,200 - 119,420 Btuh**
- **208 to 600 Volts**
- **1 or 3 Phase**
- **Meets NEC, CSA, OSHA and UL Requirements**
- **CE Approved Models Available**

Description

Type CXH-A is designed to heat areas classified as hazardous locations to provide primary or supplementary heating for comfort or freeze protection.

Applications

- Sewage Treatment Plants
- Petrochemical Facilities, Oil Rigs
- Unattended Pumping Stations
- Chemical Storage and Handling Facilities
- Paint Storage Areas
- Grain Elevators
- Coal Preparation Plants
- Aircraft Servicing Areas
- Oil Refineries
- Areas Containing Metal Dusts

Construction

Cabinet — 14 gauge steel construction with polyester powder coat paint finish.

Adjustable Louvers — Control the direction of airflow as needed.

Rugged, Seamless, Copper Heating Elements — are immersed in the sealed liquid-to-air heat exchanger.

Factory Sealed Heat Exchanger — Features steel tubes with integral aluminum fins and filled with glycol-water heat transfer fluid.

Safety Pressure Relief Device on the heat exchanger is factory helium leak tested to assure a leak-proof design.

Explosion Proof Ball Bearing Motor — Permanently lubricated and equipped with built-in thermal overload protection.

Epoxy Coated Aluminum Fan — Prevents sparking.

Features

Pre-Wired Explosion Proof Control Center with magnetic contactor and control circuit transformer.

Quick-acting Manual Reset Cutout

Pole, Wall and Ceiling Mounting Kits — Optional. Recessed threaded fasteners on top of heater for mounting with threaded rods.

Warranty — Limited Three Year

Optional Features

- Built-in Thermostat 50°F to 90°F
- Built-in Manual Disconnect Switch
- Pilot Light
- Fan Selector Switch

Designed for Areas Classified

Low operating temperature for atmospheres having an ignition temperature higher than 165˚C (329˚F) code T3B.

- Class I, Group C, D - Divisions 1 & 2
- Class II, Groups E, F, G - Divisions 1 & 2

Optional Classifications

- Temperature Code T3C 160°C (320°F)
  Class I, Groups C, D - Divisions 1 & 2
  Class II, Groups F, G - Divisions 1 & 2
- Arctic Duty Construction

Advantages

- Easy Installation
- Safe, Propylene Glycol Heat Transfer Fluid
- Low Surface Temperature
- Wall, Pole or Ceiling Mounting
- Built-in Controls
- Virtually Maintenance Free
- Corrosion Resistant
- 120V Control (24V optional)
- Rugged and Versatile

Refer to WR-80EP in the Controls section.

CXH-A

Explosion Proof Blower Heater for Hazardous Locations *(cont'd.)*

Mounting Kits

Pole (PMB)[1]

Particularly useful in buildings with insufficient strength to use other types of mounts. Requires 3-1/2" schedule 40 pipe (4" O.D.) - not supplied.

Wall (WMB)[1]

Ideal for use in buildings that have substantial walls. Arm only can also be bolted directly to structural steel.

Ceiling (HMK)

Simple and economical if adequate overhead structure exists. Requires 5/8" rod, cut and threaded (not supplied).

Pole Mounting Bracket

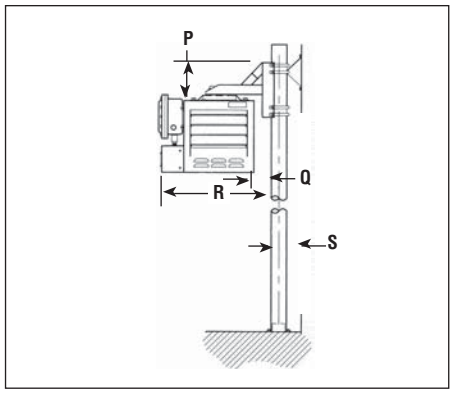

Wall Mounting Bracket

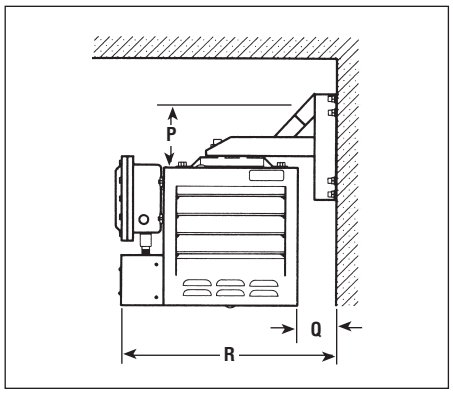

Ceiling Mounting Bracket

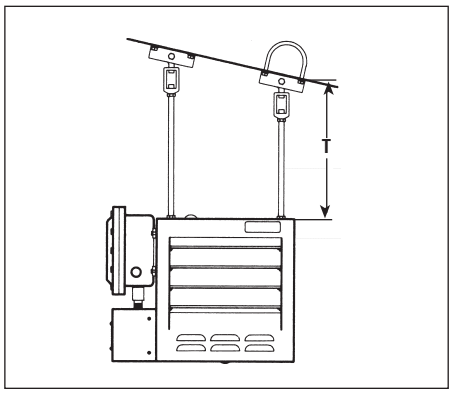

Mounting Kits

Heater	Pole		Wall		Ceiling		Dimensions (In.)				
	Model	PCN	Model	PCN	Model	PCN	P	Q	R	S	T (Min.)
CXH-A-03 to -10	PMB-12	025179	WMB-12	025152	HMK-00	025195	10	5-1/2	29-1/2	6	7
CXH-A-15 to -20	PMB-16	025187	WMB-16	025160	HMK-00	025195	11-1/2	5-1/8	33	6	7
CXH-A-25 to -35	PMB-20	029073	WMB-20	029065	HMK-00	025195	14-1/2	6-3/8	38-1/4	6	7

Wall Mounting Kits (for models supplied with disconnect switch)

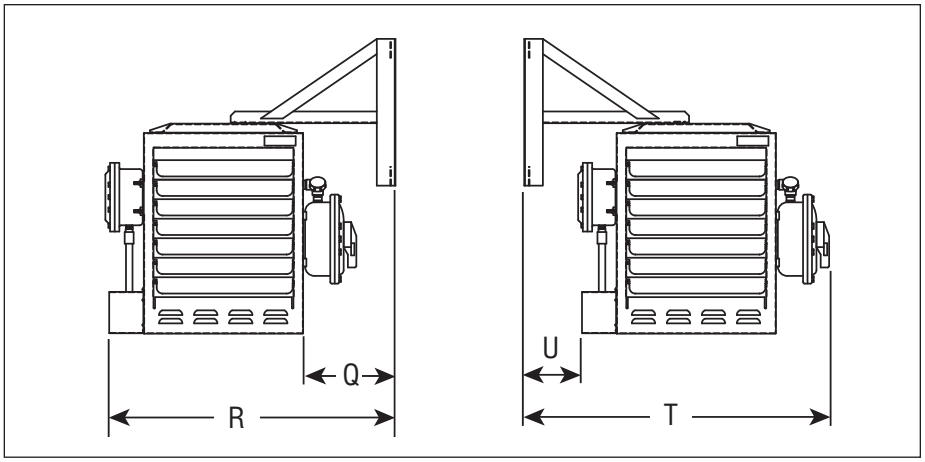

Wall Mounting Kits (for models supplied with disconnect switch)

Heater	Model	PCN	Dimensions				Wt. Lbs
			Q	R	T	U	
CXH-A-03 to -10	WMBD-12	028880	7-7/8	31-1/16	30-1/8	6-15/16	26
CHX-A-15 to -20	WMBD-16	028898	13-3/4	40-15/16	35-3/8	8-3/16	28
CHX-A-25 to -35	WMDD-20	028900	14-7/8	46-1/16	40-1/2	9-5/16	30

CXH-A

Explosion Proof Blower Heater for Hazardous Locations *(cont'd.)*

Dimensions (Inches)

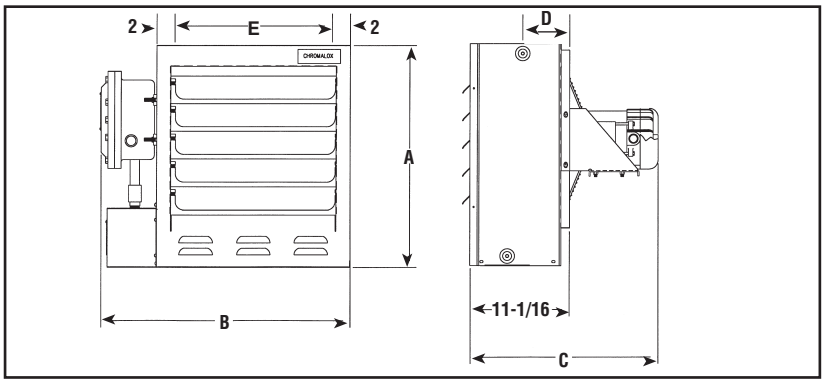

Dimensions (Inches)

Heater	Dimensions (In.)				
	A	B	C	D	E (Mtg. Holes)
CXH-A-03 to -10	19-1/8	23-7/8	21	3-1/2	13-5/8
CXH-A-15 to -20	25	27-7/8	21	4-13/32	17-5/8
CXH-A-25 to -35	32-1/8	31-7/8	21-3/4	5-1/2	21-5/8

Notes —
A. E dimension mounting hole center to center.
B. Disconnect switch option increases B dimension by 7 inches.

CXH-A

Explosion Proof Blower Heater for Hazardous Locations *(cont'd.)*

Optional Controls & Disconnects

Built-in Adjustable Thermostat

- Temperature range 50°F to 90˚F
- Adjustable control knob on exterior of explosion-proof enclosure
- Mounted and wired to heater control center
- Eliminates installation of wall thermostats and associated explosion-proof conduit.
- Factory Installed

Built-in Disconnect Switch

- 15, 30 or 60 Amp as required by application
- Factory installed, eliminating field labor
- Meets National Electric Code (NEC)

Built-in Fan Switch

- Allows fan only operation for cooling

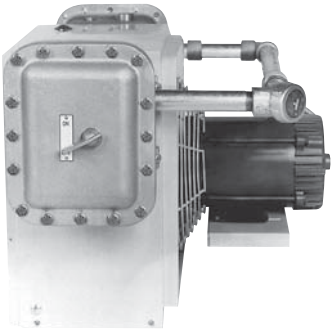

Specifications and Ordering Information

Electrical (60 Hz)					Motor				Air Delivery				Ordering			
kW	Volts	Phase	Amps	Con-trol Volts	Phase	HP	RPM	CFM	FPM	Temp. Rise (°F)	Horiz. Throw (Ft.)	Mtg. Height (Ft.)	Model	Stock	PCN	Wt. (Lbs.)
Standard Models																
3	208	1	16.7	120	1	1/4	1,725	700	900	13	28	8	CXH-A-03-81-32-00-20EP	NS	026008	135
3	208	3	9.7	120	3	1/4	1,725	700	900	13	28	8	CXH-A-03-83-32-00-20EP	NS	026016	135
3	240	1	14.8	120	1	1/4	1,725	700	900	13	28	8	**CXH-A-03-21-32-00-20EP**	**S**	**026024**	135
3	240	3	8.6	120	3	1/4	1,725	700	900	13	28	8	CXH-A-03-23-32-00-20EP	NS	026032	135
3	480	3	4.3	120	3	1/4	1,725	700	900	13	28	8	**CXH-A-03-43-32-00-20EP**	**S**	**026040**	135
3	575	3	3.6	120	3	1/4	1,725	700	900	13	28	8	CXH-A-03-63-32-00-20EP	NS	026059	135
3	208	1	16.7	24	1	1/4	1,725	700	900	13	28	8	CXH-A-03-81-30-00-20EP	NS	026067	135
3	208	3	9.7	24	3	1/4	1,725	700	900	13	28	8	CXH-A-03-83-30-00-20EP	NS	026075	135
3	240	1	14.8	24	1	1/4	1,725	700	900	13	28	8	CXH-A-03-21-30-00-20EP	NS	026083	135
3	240	3	8.6	24	3	1/4	1,725	700	900	13	28	8	CXH-A-03-23-30-00-20EP	NS	026091	135
3	480	3	4.3	24	3	1/4	1,725	700	900	13	28	8	CXH-A-03-43-30-00-20EP	NS	026104	135
3	575	3	3.6	24	3	1/4	1,725	700	900	13	28	8	CXH-A-03-63-30-00-20EP	NS	026112	135
5	208	1	26.3	120	1	1/4	1,725	700	900	22	28	8	CXH-A-05-81-32-00-20EP	NS	026120	135
5	208	3	15.3	120	3	1/4	1,725	700	900	22	28	8	**CXH-A-05-83-32-00-20EP**	**S**	**026139**	135
5	240	1	23.1	120	1	1/4	1,725	700	900	22	28	8	CXH-A-05-21-32-00-20EP	NS	026147	135
5	240	3	13.4	120	3	1/4	1,725	700	900	22	28	8	**CXH-A-05-23-32-00-20EP**	**S**	**026155**	135
5	480	3	6.7	120	3	1/4	1,725	700	900	22	28	8	**CXH-A-05-43-32-00-20EP**	**S**	**026163**	135
5	575	3	5.6	120	3	1/4	1,725	700	900	22	28	8	CXH-A-05-63-32-00-20EP	NS	026171	135
5	208	1	26.3	24	1	1/4	1,725	700	900	22	28	8	CXH-A-05-81-30-00-20EP	NS	026180	135
5	208	3	15.3	24	3	1/4	1,725	700	900	22	28	8	CXH-A-05-83-30-00-20EP	NS	026198	135
5	240	1	23.1	24	1	1/4	1,725	700	900	22	28	8	CXH-A-05-21-30-00-20EP	NS	026200	135
5	240	3	13.4	24	3	1/4	1,725	700	900	22	28	8	CXH-A-05-23-30-00-20EP	NS	026219	135
5	480	3	6.7	24	3	1/4	1,725	700	900	22	28	8	CXH-A-05-43-30-00-20EP	NS	026227	135
5	575	3	5.6	24	3	1/4	1,725	700	900	22	28	8	CXH-A-05-63-30-00-20EP	NS	026235	135
7.5	208	1	38.4	120	1	1/4	1,725	840	1,070	27	32	10	CXH-A-07-81-32-00-20EP	NS	026243	135
7.5	208	3	22.2	120	3	1/4	1,725	840	1,070	27	32	10	**CXH-A-07-83-32-00-20EP**	**S**	**026251**	135
7.5	240	1	33.6	120	1	1/4	1,725	840	1,070	27	32	10	CXH-A-07-21-32-00-20EP	NS	026260	135
7.5	240	3	19.4	120	3	1/4	1,725	840	1,070	27	32	10	CXH-A-07-23-32-00-20EP	NS	026278	135
7.5	480	3	9.7	120	3	1/4	1,725	840	1,070	27	32	10	**CXH-A-07-43-32-00-20EP**	**S**	**026286**	135
7.5	575	3	8.1	120	3	1/4	1,725	840	1,070	27	32	10	CXH-A-07-63-32-00-20EP	NS	026294	135
7.5	208	1	38.4	24	1	1/4	1,725	840	1,070	27	32	10	CXH-A-07-81-30-00-20EP	NS	026307	135
7.5	208	3	22.2	24	3	1/4	1,725	840	1,070	27	32	10	CXH-A-07-83-30-00-20EP	NS	026315	135
7.5	240	1	33.6	24	1	1/4	1,725	840	1,070	27	32	10	CXH-A-07-21-30-00-20EP	NS	026323	135
7.5	240	3	19.4	24	3	1/4	1,725	840	1,070	27	32	10	CXH-A-07-23-30-00-20EP	NS	026331	135
7.5	480	3	9.7	24	3	1/4	1,725	840	1,070	27	32	10	CXH-A-07-43-30-00-20EP	NS	026340	135
7.5	575	3	8.1	24	3	1/4	1,725	840	1,070	27	32	10	CXH-A-07-63-30-00-20EP	NS	026358	135

CXH-A

Explosion Proof Blower Heater for Hazardous Locations *(cont'd.)*

Specifications and Ordering Information

Electrical (60 Hz)					Motor				Air Delivery				Ordering			
kW	Volts	Phase	Amps	Control Volts	Phase	HP	RPM	CFM	FPM	Temp. Rise (°F)	Horiz. Throw (Ft.)	Mtg. Height (Ft.)	Model	Stock	PCN	Wt. (Lbs.)
10	208	3	29.2	120	3	1/4	1,725	840	1,070	36	32	10	CXH-A-10-83-32-00-20EP	NS	026366	140
10	240	1	44	120	1	1/4	1,725	840	1,070	36	32	10	CXH-A-10-21-32-00-20EP	NS	026374	140
10	240	3	25.5	120	3	1/4	1,725	840	1,070	36	32	10	**CXH-A-10-23-32-00-20EP**	**S**	**026382**	140
10	480	3	12.7	120	3	1/4	1,725	840	1,070	36	32	10	**CXH-A-10-43-32-00-20EP**	**S**	**025101**	140
10	575	3	10.6	120	3	1/4	1,725	840	1,070	36	32	10	CXH-A-10-63-32-00-20EP	NS	026390	140
10	208	3	29.2	24	3	1/4	1,725	840	1,070	36	32	10	CXH-A-10-83-30-00-20EP	NS	026403	140
10	240	1	44	24	1	1/4	1,725	840	1,070	36	32	10	CXH-A-10-21-30-00-20EP	NS	026411	140
10	240	3	25.5	24	3	1/4	1,725	840	1,070	36	32	10	CXH-A-10-23-30-00-20EP	NS	026420	140
10	480	3	12.7	24	3	1/4	1,725	840	1,070	36	32	10	CXH-A-10-43-30-00-20EP	NS	026438	140
10	575	3	10.6	24	3	1/4	1,725	840	1,070	36	32	10	CXH-A-10-63-30-00-20EP	NS	026446	140
15	208	3	43	120	3	1/4	1,725	1,450	1,040	31	47	10	CXH-A-15-83-32-00-20EP	NS	026454	160
15	240	3	37.5	120	3	1/4	1,725	1,450	1,040	31	47	10	CXH-A-15-23-32-00-20EP	NS	026462	160
15	480	3	18.7	120	3	1/4	1,725	1,450	1,040	31	47	10	**CXH-A-15-43-32-00-20EP**	**S**	**026470**	160
15	575	3	15.7	120	3	1/4	1,725	1,450	1,040	31	47	10	CXH-A-15-63-32-00-20EP	NS	026489	160
15	208	3	43	24	3	1/4	1,725	1,450	1,040	31	47	10	CXH-A-15-83-30-00-20EP	NS	026497	160
15	240	3	37.5	24	3	1/4	1,725	1,450	1,040	31	47	10	CXH-A-15-23-30-00-20EP	NS	026500	160
15	480	3	18.7	24	3	1/4	1,725	1,450	1,040	31	47	10	CXH-A-15-43-30-00-20EP	NS	026518	160
15	575	3	15.7	24	3	1/4	1,725	1,450	1,040	31	47	10	CXH-A-15-63-30-00-20EP	NS	026526	160
18	240	3	44.7	120	3	1/4	1,725	1,400	1,000	39	43	10	CXH-A-18-23-32-00-20EP	NS	026534	171
18	240	3	44.7	24	3	1/4	1,725	1,400	1,000	39	43	10	CXH-A-18-23-30-00-20EP	NS	026542	171
20	480	3	24.8	120	3	1/4	1,725	1,400	1,000	43	43	10	**CXH-A-20-43-32-00-20EP**	**S**	**025110**	171
20	575	3	20.7	120	3	1/4	1,725	1,400	1,000	43	43	10	CXH-A-20-63-32-00-20EP	NS	026550	171
20	480	3	24.8	24	3	1/4	1,725	1,400	1,000	43	43	10	CXH-A-20-43-30-00-20EP	NS	026569	171
20	575	3	20.7	24	3	1/4	1,725	1,400	1,000	43	43	10	CXH-A-20-63-30-00-20EP	NS	026577	171
25	480	3	31.1	120	3	1/2	1,725	2,330	1,070	32	54	10	**CXH-A-25-43-32-00-20EP**	**S**	**028556**	216
25	575	3	25.8	120	3	1/2	1,725	2,330	1,070	32	54	10	CXH-A-25-63-32-00-20EP	NS	028589	216
25	480	3	31.1	24	3	1/2	1,725	2,330	1,070	32	54	10	CXH-A-25-43-30-00-20EP	NS	028602	216
25	575	3	25.8	24	3	1/2	1,725	2,330	1,070	32	54	10	CXH-A-25-63-30-00-20EP	NS	028609	216
30	480	3	37.1	120	3	1/2	1,725	2,330	1,070	39	54	10	**CXH-A-30-43-32-00-20EP**	**S**	**028564**	216
30	575	3	30.2	120	3	1/2	1,725	2,330	1,070	39	54	10	CXH-A-30-63-32-00-20EP	NS	028615	216
30	480	3	37.1	24	3	1/2	1,725	2,330	1,070	39	54	10	CXH-A-30-43-30-00-20EP	NS	028620	216
30	575	3	30.2	24	3	1/2	1,725	2,330	1,070	39	54	10	CXH-A-30-63-30-00-20EP	NS	028625	216
35	480	3	43.1	120	3	1/2	1,725	2,330	1,070	45	54	10	**CXH-A-35-43-32-00-20EP**	**S**	**028572**	216
35	575	3	36	120	3	1/2	1,725	2,330	1,070	45	54	10	CXH-A-35-63-32-00-20EP	NS	028605	216
35	480	3	43.1	24	3	1/2	1,725	2,330	1,070	45	54	10	CXH-A-35-43-30-00-20EP	NS	028612	216
35	575	3	36	24	3	1/2	1,725	2,330	1,070	45	54	10	CXH-A-35-63-30-00-20EP	NS	028617	216
Models with Built-In Thermostats																
10	480	3	12.7	120	3	1/4	1,725	840	1,070	36	32	10	**CXH-A-10-43-32-40-20EP**	**S**	**028580**	150
20	480	3	24.8	120	3	1/4	1,725	1,400	1,070	43	43	10	**CXH-A-20-43-32-40-20EP**	**S**	**028599**	181
25	480	3	31.1	120	3	1/2	1,725	2,330	1,070	32	54	10	**CXH-A-25-43-32-40-20EP**	**S**	**028601**	226
30	480	3	37.1	120	3	1/2	1,725	2,330	1,070	39	54	10	**CXH-A-30-43-32-40-20EP**	**S**	**028610**	226
35	480	3	43.1	120	3	1/2	1,725	2,330	1,070	45	54	10	**CXH-A-35-43-32-40-20EP**	**S**	**028628**	226

Stock Status: **S** = stock AS = assembly stock NS = non-stock
To Order—Specify model, PCN, kW, volts, phase and quantity.

CXH-A

Explosion Proof Blower Heater for Hazardous Locations *(cont'd.)*

Ordering Information

To Order — Complete the Model Number using the Matrix Provided.

Model Numbers

When ordering CXH-A heaters, specify the model number and corresponding PCN (Product Code Number, found in the Ordering Information Table). If thermostat, or disconnect switch options are required, designate these options in addition to the model number when ordering. Use PCN Numbers only on standard models. On made to order CXH heaters, complete catalog number from matrix provided. Always specify voltage, phase and kW by listing them on the purchase order product specifications.

Model	Explosion Proof Blower Heater
CXH-A	

Code	Heating Element Rating (kW)
03	3
05	5
07	7.5
10	10
15	15
18	18
20	20
25	25
30	30
35	35

Code	Heater Volts
2	240
3	380 (3 phase only)
4	480 (3 phase only)
5	415 (3 phase only)
6	575 (3 phase only)
8	208
9	600 (3 phase only)

Code	Phase
1	1
3	3

Code	Control Volts
30	24
32	120 (Std.)

Code	Thermostat Option
00	Without Thermostat
40	Thermostat

Code	Heat Exchanger	
1	Ethylene Groups C, D, E, F, G	T3B
2	Propylene Groups C, D, E, F, G (Std.)	T3B
3	Ethylene Groups C, D, F, G	T3C
4	Propylene Groups C, D, F, G	T3C

Code	Options
0	Without Disconnect
1	Disconnect: 15 Amp 3-phase, 30 Amp 1-phase or 3-phase, specify as requried
2	60 Amp Disconnect
3	Pilot Light No Disconnect
4	Pilot Light and 30 Amp Disconnect
5	Pilot Light and 60 Amp Disconnect
6	Summer Fan Switch
7	Summer with Pilot Light
8	Disconnect with Fan Switch
9	Disconnect Pilot Light and Fan Switch

Code	
EP	Explosion Proof

CXH-A	**10**	**4**	**3**	**30**	**40**	**1**	**1**	**EP**	**Typical Model Number**

CXH-A

Explosion Proof Blower Heater for Hazardous Locations *(cont'd.)*

Heater Rating and Operating Data

(3 to 35 kW)

	Hazardous Location Classifications	3 to 35 kW Models - Class I, Group C & D; Class II, Groups E, F & G, Divisions 1 & 2
	Temperature Codes	This temperature shall not exceed the ignition temperature of the gas or vapor to be encountered. All standard models 165˚C (329˚F) T3B
INSTALLATION	Maximum Mounting Height From Floor to Bottom of Heater	8' to 10' (2.4 to 3 meters) normal, when heat is required at floor level.
	Ambient Temperature	-49˚F/-45˚C (Min.) 104˚F/40˚C (Max.)
	Operating Limits Maximum Operational Altitude Above Sea level	7500' (2286 meters). Check with local Chromalox sales office for recommendations for higher elevations.
PROTECTION	High-Limit	Manual reset quick acting linear type thermal cutout.
	Pressure Relief	Pressure relief device.
HEAT EXCHANGER	General Description	Steel tubes, with integral rolled-aluminum fins
	Core Material	Steel.
	Heat Transfer Fluid	Propylene Glycol (Ethylene Glycol available for arctic duty - check with local Chromalox sales office.)
	Heating Element Assembly	Immersion heater assembly with seamless copper sheathed heating elements.
CABINET	Cabinet	14 gauge steel, polyester powder-coated. Individually adjustable louvers with minimum position stops.
	Fan Guard	Heavy duty polyester powder-coated steel.
	Fasteners	Nickel plated steel for corrosion resistance.
	Conduit Material	Plated steel for corrosion resistance.
	Control Enclosure	Cast aluminum (non-copper Alloy) NEMA 7 and 9 enclosure.
	Hanger Connections	2 (two) 5/8" UNC tapped holes.
CONTROLS	Control Circuit	Built in 120V control. Optional 24V control available.
	Power Contactor	50 Amp/600V.
	Transformer	Primary voltage same as heater voltage - secondary voltage, 24V or 120V.

DRA

Portable Spot Industrial Salamander Blower Heater

- 7.5 to 30 kW
- 25,590 to 102,360 BTUH
- 208, 240, 480 and 600 Volts
- Single and Three Phase
- No Assembly Required
- Built-in Controls

Dimensions (Inches)

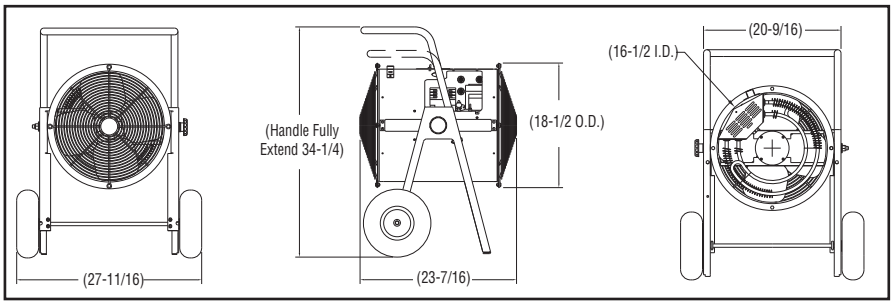

Description

The Chromalox DRA Dragon is a rugged industrial grade, self contained, highly mobile, electric blower heater. The DRA can be left unattended without the threat of poisoning from combustion by-products associated with fuel fired heaters. The built in safety features include an adjustable thermostat to control the outlet air temperature, auto-reset cutouts for the fan motor and heating elements. The thermostat provides settings for full off, fan only and temperature control in the heating setting. Dragon heaters feature a large, easily accessible control and wiring compartment containing a magnetic contactor; additional safety is provided by a 120 volt control voltage transformer and motor starter on 480 and 600 volt units. The bright red polyester powder coated heating cylinder is highly visible and can be rotated to direct heat or fan driven air movement where it is needed. For assured safety, all standard units meet the requirements of UL (File No. E7061) and CSA (File No. LR40859).

Construction

Heating Cylinder

A structural frame consisting of 2 spun steel rings and 2 formed steel channels support a 20 gauge steel cylinder phosphate coated for corrosion resistance, and finished in red polyester powder coat paint. The heating cylinder pivots vertically to direct air flow.

Leg Assembly

Each side consists of a one piece, 12 gauge, formed steel member, which accepts a steel tubular handle, held in place with a 1 1/2" long x 1/4" bolt on each side. The handle can be raised from the shipping position if desired. The rubber, pneumatic wheels are 10" diameter and 3 1/2" wide to provide ease of transporting the heater on irregular and gravel surfaces. The large wheels make it easy to roll up stairways without damage to decorative step surfaces.

Fan Assembly

The self-centering fan assembly consists of a totally enclosed, permanently lubricated motor and a dynamically balanced aluminum fan blade for smooth, quiet operation.

Controls

A thermostat, with a temperature range of 40°F to 100°F is included, with a full off position, a fan only position and an adjustable range of temperature settings in the heating mode position. Each unit includes a 3 pole magnetic contactor and auto-reset thermal cutout. 480 volt and 600 volt units also include a motor relay and 120 volt control voltage transformer for personnel safety.

Safety Guards

Front and rear grills are 10 gauge, finished in black polyester powder coat and are designed to meet OSHA safety requirements.

Heating Assembly

The patented metal sheath Fintube® heating elements consist of steel fins furnace brazed on industrial grade .475 diameter steel sheath tubular heaters for maximum heat transfer. The elements are held in place with steel bulkhead fittings for durability. The elements feature a high temperature finish for corrosive protection.

Applications

- For Best Results Use in Enclosed Area with Ceiling Heights Below 15'
- Any Commercial or Industrial Application Needing Instant Fan Forced Heat
- Building Construction
- Curing Plaster and Concrete
- Warming Workers
- Thawing Frozen Pipes
- Thawing Railroad Cars
- Heating Large Tents
- Non-Hazardous Areas

DRA

Portable Spot Industrial Salamander Blower Heater *(cont'd.)*

Specifications And Ordering Information

kW	Volts	Phase	Amps[1]	BTU/H	HP	CFM	Temp. Rise °F[2]	Model	Stock	PCN	Wt. (Lbs.)
7.5	208	1 and 3	36.3/21.0	25,590	0.06	1070	23	DRA-07-83	NS	295523	65
7.5/5.6	240/208	1 and 3	31.5/18.3[3]	25,590	0.06	1070	23	**DRA-07-23**	**S**	**295531**	65
9.75	208	1 and 3	47.1/27.3	33,267	0.06	1070	31	**DRA-10-83**	**S**	**295540**	65
10/7.5	240/208	1 and 3	40.8/23.7[3]	33,267	0.06	1070	31	**DRA-10-23**	**S**	**295558**	65
15	208	3	41.8	51,180	0.06	1070	46	DRA-15-83	NS	295566	65
15/11.2	240/208	3	36.3[3]	51,180	0.06	1070	46	**DRA-15-23**	**S**	**295574**	65
15	480	1 and 3	31.4/18.2	51,180	0.06	1070	46	**DRA-15-43**	**S**	**295582**	65
15	600	1 and 3	25.2/14.6	51,180	0.06	1070	46	DRA-15-93	NS	295596	65
19.5/15	240/208	3	47.1[3]	66,534	0.06	1070	61	**DRA-20-23**	**S**	**295603**	75
20	480	1 and 3	42.0/24.4	68,240	0.06	1070	62	**DRA-20-43**	**S**	**295611**	75
20	600	1 and 3	33.5/19.4	68,240	0.06	1070	62	DRA-20-93	NS	295620	75
30	480	3	36.3	102,360	0.06	1070	92	**DRA-30-43**	**S**	**295638**	75
30	600	3	29.1	102,360	0.06	1070	92	DRA-30-93	NS	295646	75

Stock Status: **S** = stock AS = assembly stock NS = non-stock
To Order—Specify model, PCN, kW, volts, phase and quantity.
1. Includes motor amps
2. Temperature rise at 240V operation
3. 208V amperage is 86% of 240V value

See back page for control, thermostat and fan options.
All units are factory wired for 3 phase operation.
Models designated 1 and 3 phase can be field wired for single phase operation.

Cable Kits for Chromalox DRA Series Portable Blower Heaters

Model No.	Used on Heater	Cable Specifications			Cord Connector	Stock	PCN	Wt. (Lbs.)
		Size/Type	Max. Amp	Temp. Ratings	NPT			
PLC-2514-4	15kW 600V 3PH	14/4 SO	15	90°C	3/4"	**S**	**295427**	7
PLC-2512-4	7.5kW 240V 3PH 15kW 480V 3PH 20kW 600V 3PH	12/4 SO	20	90°C	1"	**S**	**295435**	9
PLC-2510-3	15kW 600V 1PH	10/3 SO	30	90°C	1"	**S**	**295443**	9
PLC-2510-4	7.5kW 208V 3PH 9.75kW 240V 3PH 20kW 480V 3PH	10/4 SO	25	90°C	1"	**S**	**295451**	11
PLC-2508-3	7.5kW 208V 1PH 7.5kW 240V 1PH 15kW 480V 1PH 20kW 600V 1PH	8/3 SO	40	90°C	1"	**S**	**295460**	12
PLC-2508-4	9.75kW 208V 3PH 30kW 600V 3PH	8/4 SO	35	90°C	1"	**S**	**295478**	15
PLC-2506-3	9.75kW 208V 1PH 9.75kW 240V 1PH 20kW 480V 1PH	6/3 SO	55	90°C	1"	**S**	**295486**	16
PLC-2506-4	15kW 240V 3PH 30kW 480V 3PH	6/4 SO	45	90°C	1"	**S**	**295494**	17
PLC-2504-4	19.5kW 240V 3PH	4/4 SO	60	90°C	1 1/4"	**S**	**295515**	25

SO = Hard Service Cord, 600V. Length = 25 Feet

Cable packages include 25 feet Type SO cable, with either 3-conductors or 4-conductors, depending on the heater requirements. Each cable assembly includes the proper cord (connector). Plugs are not included. All models are factory wired for 3-phase, but can be field wired for single phase, select plug and cord accordingly.

DRA

Portable Spot Industrial Salamander Blower Heater *(cont'd.)*

Plug Kits

Plug Type	Catalog Number	Description	Volts	Amps	Configuration	NEMA#	ANSI#	Fits Cable Dia.	Stock	PCN	Wt. (Lbs.)
LOCKING	PGL-15-20	3 Pole, 4 Wire	250	20		L15-20	C73.85	.385”-.780	ST	338845	0.5
LOCKING	PGL-15-30	3 Pole, 4 Wire	250	30		L15-30	C73.86	.385”-.780	ST	338853	0.5
LOCKING	PGL-16-30	3 Pole, 4 Wire	480	30		L16-30	C73.88	.595”-1.150	ST	338861	0.5
LOCKING	PGL-17-30	3 Pole, 4 Wire	600	30		L17-30	C73.89	.595”-1.150	ST	338870	0.5
LOCKING	PGL-3763C	2 Pole, 3 Wire	600	50		—	—	.750"-1.125"	ST	338917	0.5
LOCKING	PGL-3765C	3 Pole, 4 Wire	600	50		—	—	.750"-1.125"	ST	338925	0.5
NON LOCKING	PGN-6-50	2 Pole, 3 Wire	250	50		6-50	C73.53	.625”-1.187”	ST	338888	0.5
NON LOCKING	PGN-15-20	3 Pole, 4 Wire	250	20		15-20	C73.59	.390”-.775”	ST	338896	0.5
NON LOCKING	PGN-15-50	3 Pole, 4 Wire	250	50		15-50	C73.61	.750”-1.250”	ST	338909	0.5

HF
Portable Blower Heater

- 1.9 - 4 kW
- 6,483 - 13,648 Btuh
- 120 and 240 Volt
- Single Phase
- AC and DC Rated Models

Dimensions (Inches)

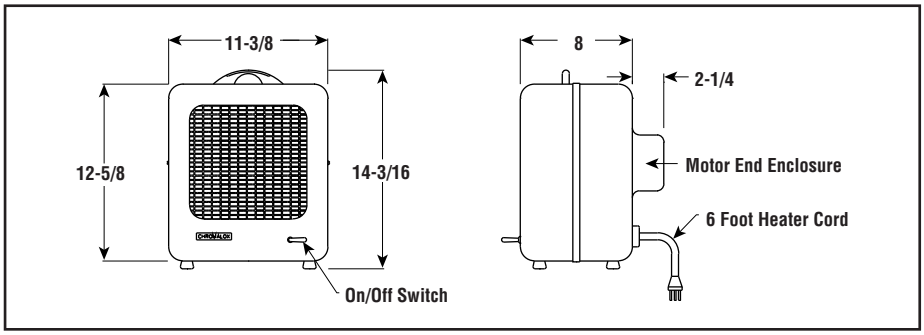

Description

Heavy duty HF portable blower heaters are ideal for heating small areas in industrial environments and are available in DC ratings for use in crane cabs.

Applications

- Construction Sites
- Garages
- Work Stations
- Warehouses
- Crane Cabs
- Storage Buildings

Construction

Cabinet — Heavy 20 gauge steel, phosphate undercoated for corrosion resistance and finished in almond powder coat providing a good, clean appearance. Includes carrying handle.

Heating Elements — Shock-resistant metal sheath heating elements, designed for long life.

AC Rated Models include a quiet, completely enclosed, vibration-free AC motor, overheat cutout, on/off toggle switch and 6 ft. cord and ground plug (except HF-303AC, which does not include a plug).

DC Rated Models equipped with DC motors and DC rated magnetic contactors wired in series with the overheat cutout. Like the AC models, DC rated units also include on/off toggle switch, 6 ft. cord and plugs except on HF-303H and HF-303E which includes the cord only and HF-403E which includes neither the cord nor the plug.

Advantages

- Clean and Reliable
- Easy to Move
- Built-in Thermal Cutout
- DC Ratings

Specifications and Ordering Information

Electrical (60 Hz)				Motor					Air Delivery[1]				Ordering			
kW	Volts	Phase	Amps	Volts	Phase	HP	RPM	CFM	FPM[1]	Temp. Rise (°F)[1]	Horiz. Throw (Ft.)	Mtg. Height (Ft.)	Model[1]	Stock	PCN	Wt. (Lbs.)
1.9	120	1	15.8	115	1	1/30	1,550	170	410	35	6	13-3/16	**HF-203G AC**	**S**	**261307**	16.5
1.9	120	1	15.8	125	1	1/60	1,725	200	480	30	6	13-3/16	**HF-203EG DC**	**S**	**261323**	16.5
2	240	1	8.3	240	1	1/30	1,550	170	410	37	6	13-3/16	**HF-203G AC**	**S**	**261315**	16.5
2	240	1	8.3	125	1	1/60	1,725	200	480	32	6	13-3/16	**HF-203DG DC**	**S**	**261331**	16.5
3	120	1	25	115	1	1/30	1,550	170	410	56	6	13-3/16	**HF-303H AC[3]**	**S**	**261340**	19
3	240	1	12.5	240	1	1/30	1,550	170	410	56	6	13-3/16	**HF-303G AC**	**S**	**261358**	19
3	120	1	25	125	1	1/60	1,725	200	480	48	6	13-3/16	HF-303E DC[3]	NS	261366	19
3	240	1	12.5	125	1	1/60	1,725	200	480	48	6	13-3/16	**HF-303DG DC**	**S**	**261374**	19
4	240	1	16.7	240	1	1/30	1,550	170	410	75	6	13-3/16	**HF-403G AC**	**S**	**261382**	19
4	240	1	16.7	125	1	1/60	1,725	200	480	63	6	13-3/16	**HF-403E DC[2]**	**S**	**261390**	19

Stock Status: **S** = stock AS = assembly stock NS = non-stock
To Order—Specify model, PCN, kW, volts, phase and quantity.

1. Approximate value.
2. Without cord and plug.
3. Cord only, no plug.

Other Notes —
A. Alternating current (AC) 60 Hz (supplied with on/off switch).
B. Direct current (DC).

CCH

Cabinet Console Blower Heater

- **2 - 18 kW**
- **6,824 - 61,416 Btuh**
- **208, 240, 277 and 480 Volt**
- **1 or 3 Phase**
- **32, 45 and 65" Lengths**

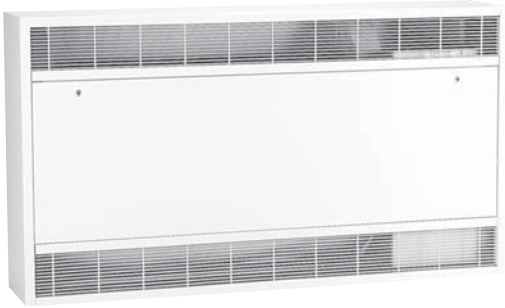

Applications

- Lobbies
- Corridors
- Entryways
- Offices
- Waiting Rooms
- Stairways
- Passenger Terminals

Construction

- 16 Gauge Steel Cabinet Construction
- Architectural Bar Grills
- Flexible Discharge and Intake Grille Configurations
- Stainless Steel Heating Elements with Corrosion Resistant Fins
- Direct-Drive Motor and Blower Fans
- Two-speed Motor (except for ceiling mount) with Built-in Time Delay on Motor Switch

Dimensions (Inches)

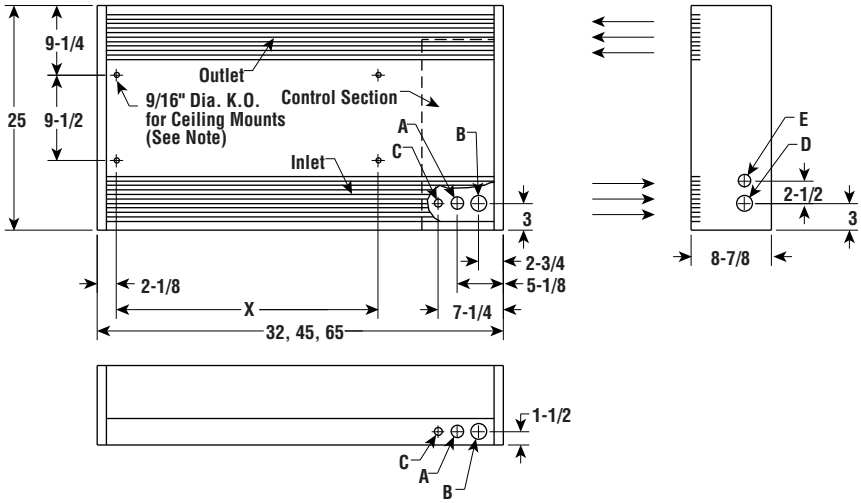

Note — Ceiling Mounting Holes are shown as viewed from front of heater.

Unit "X"

32" = 16"
45" = 29"
65" = 49"

Knockout Schedule

Item Size	Qty.
A. 1-3/8"/2" Dia.	2
B. 1-3/4"	2
C. 7/8"	2
D. 1-3/4"/2"	1
E. 1-3/8"	1

Features

- Almond Wear-resistant Finish of Powder Coat Polyester
- Thermal Limit Switch with Automatic Reset
- Multiple Knockouts
- Floor, Wall or Ceiling Mountable - Semi or Fully Recessed or Surface Mounted.
- Built in controls are located in tamper resistant control enclosure

Optional Controls (Select One)

- Built-in Thermostat 45°F - 90°F
- Provisions for External 24V Room Thermostat
- Built-in Relay for Use with Remote Thermostat Control (208V)

Optional Accessories

- Duct Transition Collar
- Disconnect Swich
- Trim Frame

Advantages

- Safer Operation
- Easy to Clean
- Easy Field Installation
- Quiet and Vibration Free Operation
- Versatile
- Attractive Cabinetry to Compliment Decor

Refer to WT-121, WT-122, WTL-121, WR-80, WR-90 in the Controls section.

CCH
Cabinet Console Blower Heater *(cont'd.)*

Specifications and Ordering Information

Electrical				Dimensions (In.)			Ordering		
kW HI/LO	Voltage Option Codes	Btuh	CFM HI/LO	Width	Height	Depth	Model	Stock	Wt. (Lbs.)
2	A,B,C,D,E,F,G,J	6,824	250/200	32	25	8-7/8	CCH-3D-02	NS	105
3	A,B,C,D,E,F,G,J	10,236	250/200	32	25	8-7/8	CCH-3D-03	NS	105
4	A,B,C,D,E,F,G,J	13,648	250/200	32	25	8-7/8	CCH-3D-04	NS	105
5	A,B,C,D,E,F,G,J	17,060	250/200	32	25	8-7/8	CCH-3D-05	NS	105
6	A,B,C,D,E,F,G,J	20,472	250/200	32	25	8-7/8	CCH-3D-06	NS	105
4	A,B,C,D,E,F,G,J	13,648	500/400	45	25	8-7/8	CCH-4D-04	NS	145
6	A,B,C,D,E,F,G,J	20,472	500/400	45	25	8-7/8	CCH-4D-06	NS	145
8	A,B,C,D,E,F,G,J	27,296	500/400	45	25	8-7/8	CCH-4D-08	NS	145
10	A,B,C,D,E,F,G,J	34,120	500/400	45	25	8-7/8	CCH-4D-10	NS	145
12	A,B,C,D,E,F,G,J	40,944	500/400	45	25	8-7/8	CCH-4D-12	NS	145
15	D,E,F,J	51,180	750/600	65	25	8-7/8	CCH-6D-15	NS	240
18	D,E,F,J	61,416	750/600	65	25	8-7/8	CCH-6D-18	NS	240

Stock Status: **S** = stock AS = assembly stock NS = non-stock
To Order—Specify model, inlet and outlet arrangement, kW, volts, phase, control or fuse options and quantity.

Voltage Selection

Code	Voltage/Phase	Code	Voltage/Phase
A	208/1	**E**	240/3
B	240/1	**F**	480/3
C	277/1	**G**	480/1
D	208/3	**J**	600/3

Notes —

A. 208 to 600V units are available in both 1 and 3 phase, all others are single phase only.

B. All heaters rated over 48 Amps require two circuits.

C. All heaters equipped with fusing where necessary to meet NEC and UL requirements.

D. Fan Motor - Permanent split capacitor type, built-in overload protection, lifetime lubricated, resiliently mounted, totally enclosed, 2 speed, direct drive, 1/20 HP.

E. Motor volts same as heater for 208, 240, 277 volt units. 480 and 600 volt units use 240V motors.

Mounting Configurations

Floor, wall or ceiling mount. Each arrangement can be recessed, semi-recessed or surface mounted as shown. A variety of inlet, outlet grille positions provides complete flexibility of use.

Surface

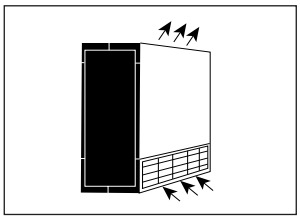

Semi-Recessed

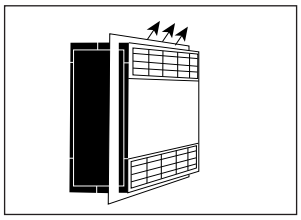

Fully Recessed

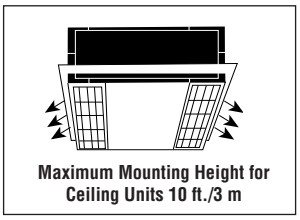

CCH

Cabinet Console Blower Heater *(cont'd.)*

Inlet & Outlet Configurations

Architectural style bar grilles can be field reconfigured for top/bottom inlet/outlet arrangements as shown below.

Upflow *A* *B* *C* *D*

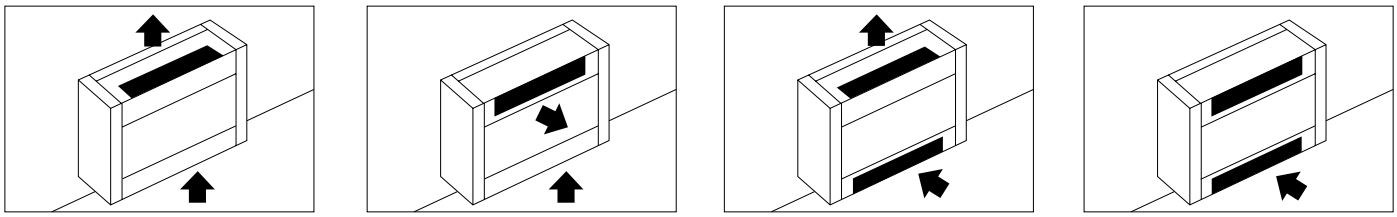

Downflow *A* *C* *B* *D*

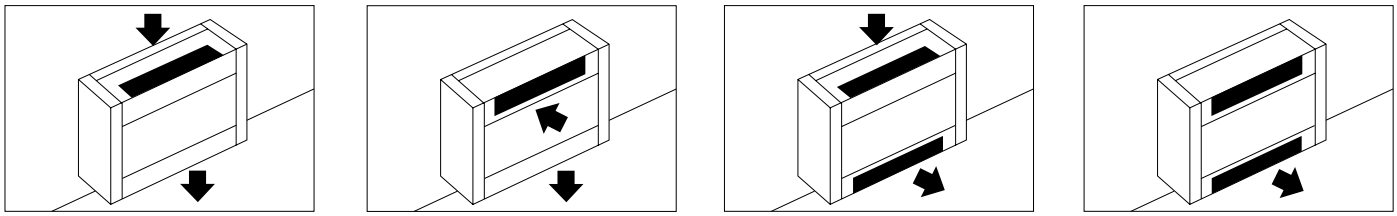

Ceiling *A* *C* *B* *D*

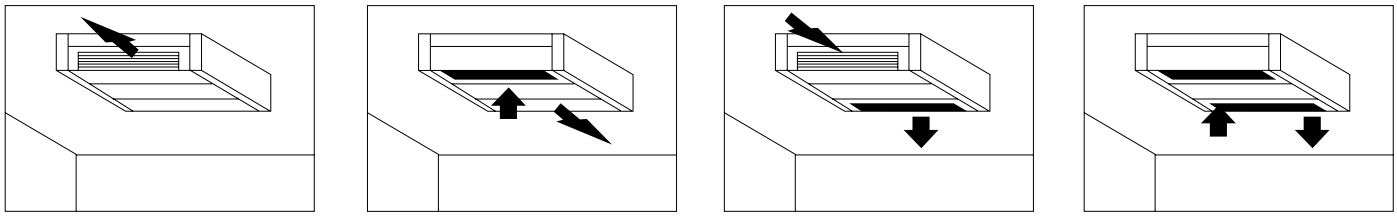

Ceiling *D* *D* *D* *D*

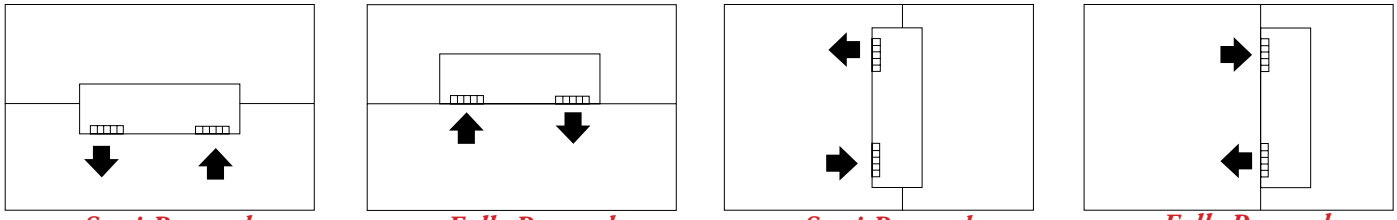

Semi-Recessed *Fully Recessed* *Semi-Recessed* *Fully Recessed*

CCH
Cabinet Console Blower Heater *(cont'd.)*

Ordering Information

To Order — Complete the Model Number using the Matrix provided.

Model Cabinet Console Blower Heater

CCH

Code	Cabinet Length (In.) & Ratings (kW)
3D	32 — 2 - 6 kW
4D	45 — 4 - 12 kW
6D	65 — 15 - 18 kW

Code	Heating Element Rating (kW)	Code	Heating Element Rating (kW)
02	2 kW	**08**	8 kW
03	3 kW	**10**	10 kW
04	4 kW	**12**	12 kW
05	5 kW	**15**	15 kW
06	6 kW	**18**	18 kW

Code	Volts/Phase	Code	Volts/Phase
A	208/1	**E**	240/3
B	240/1	**F**	480/3
C	277/1	**G**	480/1
D	208/3	**J**	600/3

Code	Control Option
3	Built-in single pole thermostat control High/low control switch for heat/fan, on/off control switch
T	Built-in low voltage relay kit for remote 24V thermostat (not included)
R	Provision for remote wire control (not included) High/low control switch for heat/fan
C	Duct transition collar for connecting to ducting
S	Disconnect switch for positive power interruption

Code	Color
68	Almond (Std.)
W	White

CCH	4D	04	A	3	W	Typical Model Number

Accessories (Field Installed)

TF32 — Trim frame for recess mounting of 32 inch cabinets

TF45 — Trim frame for recess mounting of 45 inch cabinets

TF65 — Trim frame for recess mounting of 65 inch cabinets

PWF35 — Permanent washable filter for 32 inch cabinets

PWF45 — Permanent washable filter for 45 inch cabinets

PWF65 — Permanent washable filter for 65 inch cabinets

For throw away filters, contact your Local Chromalox Sales office.

HCH
Wall Mounted Convection Heater

- 500 - 5,000 Watts
- 1,706 - 17,060 Btuh
- 120, 208, 240, 277, 480, 575 and 600 Volt
- 1 & 3 Phase
- Built-in Controls
- 24, 36 or 48" Widths

Dimensions (Inches)

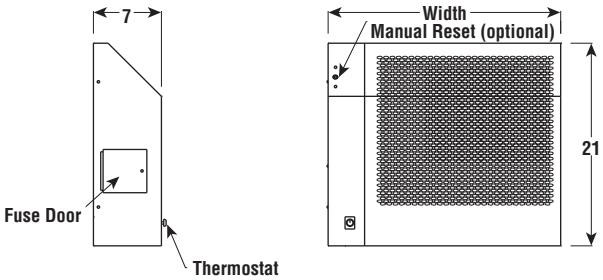

Description

Type HCH convection heaters are designed for easy installation in hard-use areas. The patented metal sheath Fintube® radiating heating elements with furnace brazed steel fins assures long life and superior heat transfer. Each unit is self-contained, complete with thermostat, automatic reset (standard) and manual reset (optional) cutout.

Applications

- Entryways
- Stairwells
- Guard Shacks
- Isolated Buildings
- Cold Spots in Offices or Plants

Construction

Cabinet — Heavy 18 gauge steel, zinc chromate primer and almond polyester powder coat finish.

Heating Elements — Rugged, shock-proof 0.475" diameter steel with furnace brazed steel fins.

Features

Power Terminal Block — Provided to facilitate field installation.

Built-in Contactors and Fused Control Voltage Transformers — Typical on all models rated over 277V and all three-phase heaters.

Thermostat and Overtemperature Cutout — All models include a thermostat (55 - 105°F) and automatic reset overtemperature cutout. Models with suffix M in the model number include an additional manual reset cutout.

Advantages

- Minimum Maintenance
- Attractive Design
- Self Contained
- Safer to Operate in Unattended Areas

CAUTION — Not intended for use where flammable vapors, gases, liquids or other combustible atmospheres are present.

HCH

Wall Mounted Convection Heater *(cont'd.)*

Specifications and Ordering Information

Electrical					Dimensions (In.)			w/o Manual Reset			w/ Manual Reset			Wt. (Lbs.)
kW	Volts	Phase	Amps	Btuh	Height	Width	Depth	Model	Stock	PCN	Model	Stock	PCN	
0.5	120	1	4.2	1,706	21	24	7	HCH-051	NS	330376	HCH-051M	NS	331459	41
0.5	208	1	2.4	1,706	21	24	7	HCH-051	NS	330384	HCH-051M	NS	331467	41
0.5	240	1	2.1	1,706	21	24	7	HCH-051	NS	330392	HCH-051M	NS	331475	41
0.5	277	1	1.8	1,706	21	24	7	HCH-051	NS	330405	HCH-051M	NS	331483	41
0.75	120	1	6.25	2,559	21	24	7	HCH-071	NS	330413	HCH-071M	NS	331491	41
0.75	208	1	3.6	2,559	21	24	7	HCH-071	NS	330421	HCH-071M	NS	331504	41
0.75	240	1	3.1	2,559	21	24	7	HCH-071	NS	330430	HCH-071M	NS	331512	41
0.75	277	1	2.7	2,559	21	24	7	HCH-071	NS	330448	HCH-071M	NS	331520	41
1	120	1	8.3	3,412	21	24	7	HCH-101	NS	330456	HCH-101M	NS	331539	41
1	208	1	4.8	3,412	21	24	7	HCH-101	NS	330464	HCH-101M	NS	331547	41
1	208	3	2.8	3,412	21	24	7	HCH-101	NS	330501	HCH-101M	NS	331580	41
1	240	1	4.2	3,412	21	24	7	HCH-101	NS	330472	HCH-101M	NS	331555	41
1	240	3	2.4	3,412	21	24	7	HCH-101	NS	330510	HCH-101M	NS	331598	41
1	277	1	3.6	3,412	21	24	7	HCH-101	NS	330480	HCH-101M	NS	331563	41
1	480	1	2.1	3,412	21	24	7	HCH-101	NS	330499	HCH-101M	NS	331571	41
1	480	3	1.2	3,412	21	24	7	HCH-101	NS	330528	HCH-101M	NS	331600	41
1	480	3	1.2	3,412	21	24	7	HCH-101 (4W)	NS	330536	HCH-101M (4W)	NS	331619	41
1.5	120	1	12.5	5,118	21	24	7	HCH-151	NS	330544	HCH-151M	NS	331627	41
1.5	208	1	7.2	5,118	21	24	7	HCH-151	NS	330552	HCH-151M	NS	331635	41
1.5	208	3	4.2	5,118	21	24	7	HCH-151	NS	330595	HCH-151M	NS	331678	41
1.5	240	1	6.3	5,118	21	24	7	HCH-151	NS	330560	HCH-151M	NS	331643	41
1.5	240	3	3.6	5,118	21	24	7	HCH-151	NS	330608	HCH-151M	NS	331686	41
1.5	277	1	3.1	5,118	21	24	7	HCH-151	NS	330579	HCH-151M	NS	331651	41
1.5	480	1	3.1	5,118	21	24	7	HCH-151	NS	330587	HCH-151M	NS	331661	41
1.5	480	3	1.8	5,118	21	24	7	HCH-151	NS	330616	HCH-151M	NS	331694	41
1.5	480	3	1.8	5,118	21	24	7	HCH-151 (4W)	NS	330659	HCH-151M (4W)	NS	331731	41
1.5	550	3	1.6	5,118	21	24	7	HCH-151	NS	330624	HCH-151M	NS	331707	41
1.5	575	3	1.5	5,118	21	24	7	HCH-151	NS	330632	HCH-151M	NS	331715	41
1.5	600	3	1.4	5,118	21	24	7	HCH-151	NS	330640	HCH-151M	NS	331723	41
2	120	1	16.7	6,824	21	24	7	HCH-201	NS	330667	HCH-201M	NS	331740	41
2	208	1	9.6	6,824	21	24	7	HCH-201	NS	330675	HCH-201M	NS	331758	41
2	208	3	5.6	6,824	21	24	7	HCH-201	NS	330712	HCH-201M	NS	331790	41
2	240	1	8.3	6,824	21	24	7	**HCH-201**	**S**	**330683**	HCH-201M	NS	331766	41
2	240	3	4.8	6,824	21	24	7	HCH-201	NS	330720	HCH-201M	NS	331803	41
2	277	1	7.2	6,824	21	24	7	HCH-201	NS	330691	HCH-201M	NS	331774	41
2	480	1	4.2	6,824	21	24	7	**HCH-201**	**S**	**330704**	HCH-201M	NS	331782	41
2	480	3	2.4	6,824	21	24	7	HCH-201	NS	330739	HCH-201M	NS	331811	41
2	480	3	2.4	6,824	21	24	7	HCH-201 (4W)	NS	330771	HCH-201M (4W)	NS	331854	41
2	550	3	2.1	6,824	21	24	7	HCH-201	NS	330747	HCH-201M	NS	331820	41
2	575	3	2	6,824	21	24	7	HCH-201	NS	330755	HCH-201M	NS	331838	41
2	600	3	1.9	6,824	21	24	7	HCH-201	NS	330763	HCH-201M	NS	331846	41
2.5	120	1	20.8	8,530	21	36	7	HCH-251	NS	330780	HCH-251M	NS	331862	57
2.5	208	1	12	8,530	21	36	7	HCH-251	NS	330798	HCH-251M	NS	331870	57
2.5	240	1	10.4	8,530	21	36	7	HCH-251	NS	330800	HCH-251M	NS	331889	57
2.5	277	1	9	8,530	21	36	7	HCH-251	NS	330819	HCH-251M	NS	331897	57
2.5	480	1	5.2	8,530	21	36	7	HCH-251	NS	330827	HCH-251M	NS	331900	57
2.5	208	3	6.9	8,530	21	36	7	HCH-251	NS	330835	HCH-251M	NS	331918	57
2.5	240	3	6	8,530	21	36	7	HCH-251	NS	330843	HCH-251M	NS	331926	57
2.5	480	3	3	8,530	21	36	7	HCH-251	NS	330851	HCH-251M	NS	331934	57
2.5	480	3	3	8,530	21	36	7	HCH-251 (4W)	NS	330894	HCH-251M (4W)	NS	331977	57
2.5	550	3	2.6	8,530	21	36	7	HCH-251	NS	330860	HCH-251M	NS	331942	57
2.5	575	3	2.5	8,530	21	36	7	HCH-251	NS	330878	HCH-251M	NS	331950	57
2.5	600	3	2.4	8,530	21	36	7	HCH-251	NS	330886	HCH-251M	NS	331969	57
3	208	1	14.4	10,236	21	36	7	HCH-301	NS	330907	HCH-301M	NS	331985	57
3	208	3	8.3	10,236	21	36	7	HCH-301	NS	330940	HCH-301M	NS	332021	57
3	240	1	12.5	10,236	21	36	7	**HCH-301**	**S**	**330915**	HCH-301M	NS	331993	57
3	240	3	7.2	10,236	21	36	7	HCH-301	NS	330958	HCH-301M	NS	332030	57
3	277	1	10.8	10,236	21	36	7	HCH-301	NS	330923	HCH-301M	NS	332005	57
3	480	1	6.3	10,236	21	36	7	**HCH-301**	**S**	**330931**	HCH-301M	NS	332013	57
3	480	3	3.6	10,236	21	36	7	HCH-301	NS	330966	HCH-301M	NS	332048	57
3	550	3	3.2	10,236	21	36	7	HCH-301	NS	330974	HCH-301M	NS	332056	57
3	575	3	3	10,236	21	36	7	HCH-301	NS	330982	HCH-301M	NS	332064	57
3	600	3	2.9	10,236	21	36	7	HCH-301	NS	330990	HCH-301M	NS	332072	57
3	480	3	3.6	10,236	21	36	7	HCH-301 (4W)	NS	331002	HCH-301M (4W)	NS	332080	57

HCH

Wall Mounted Convection Heater *(cont'd.)*

Specifications and Ordering Information

Electrical					Dimensions (In.)			w/o Manual Reset			w/ Manual Reset			Wt. (Lbs.)
kW	Volts	Phase	Amps	Btuh	Height	Width	Depth	Model	Stock	PCN	Model	Stock	PCN	
3.5	208	1	16.8	11,942	21	36	7	HCH-351	NS	331010	HCH-351M	NS	332099	57
3.5	240	1	14.6	11,942	21	36	7	HCH-351	NS	331029	HCH-351M	NS	332101	57
3.5	277	1	12.6	11,942	21	36	7	HCH-351	NS	331037	HCH-351M	NS	332110	57
3.5	480	1	7.3	11,942	21	36	7	HCH-351	NS	331045	HCH-351M	NS	332128	57
3.5	208	3	9.7	11,942	21	36	7	HCH-351	NS	331053	HCH-351M	NS	332136	57
3.5	240	3	8.4	11,942	21	36	7	HCH-351	NS	331061	HCH-351M	NS	332144	57
3.5	480	3	4.2	11,942	21	36	7	HCH-351	NS	331070	HCH-351M	NS	332152	57
3.5	550	3	3.7	11,942	21	36	7	HCH-351	NS	331088	HCH-351M	NS	332160	57
3.5	575	3	3.5	11,942	21	36	7	HCH-351	NS	331096	HCH-351M	NS	332179	57
3.5	600	3	3.4	11,942	21	36	7	HCH-351	NS	331109	HCH-351M	NS	332187	57
3.5	480	3	4.2	11,942	21	36	7	HCH-351 (4W)	NS	331117	HCH-351M (4W)	NS	332195	57
4	208	1	19.2	13,648	21	48	7	HCH-401	NS	331125	HCH-401M	NS	332208	70
4	208	3	11.1	13,648	21	48	7	HCH-401	NS	331168	HCH-401M	NS	332240	70
4	240	1	16.7	13,648	21	48	7	**HCH-401**	**S**	**331133**	HCH-401M	NS	332216	70
4	240	3	9.6	13,648	21	48	7	HCH-401	NS	331176	HCH-401M	NS	332259	70
4	277	1	14.4	13,648	21	48	7	HCH-401	NS	331141	HCH-401M	NS	332224	70
4	480	1	8.3	13,648	21	48	7	HCH-401	NS	331150	HCH-401M	NS	332232	70
4	480	3	4.8	13,648	21	48	7	HCH-401	NS	331184	HCH-401M	NS	332267	70
4	550	3	4.2	13,648	21	48	7	HCH-401	NS	331192	HCH-401M	NS	332275	70
4	575	3	4.0	13,648	21	48	7	HCH-401	NS	331205	HCH-401M	NS	332283	70
4	600	3	3.9	13,648	21	48	7	HCH-401	NS	331213	HCH-401M	NS	332291	70
4	480	3	4.8	13,648	21	48	7	HCH-401 (4W)	NS	331221	HCH-401M (4W)	NS	332304	70
4.5	208	1	21.6	15,354	21	48	7	HCH-451	NS	331230	HCH-451M	NS	332355	70
4.5	240	1	18.8	15,354	21	48	7	HCH-451	NS	331248	HCH-451M	NS	332320	70
4.5	277	1	16.2	15,354	21	48	7	HCH-451	NS	331256	HCH-451M	NS	332339	70
4.5	480	1	9.4	15,354	21	48	7	HCH-451	NS	331264	HCH-451M	NS	332347	70
4.5	208	3	12.5	15,354	21	48	7	HCH-451	NS	331272	HCH-451M	NS	332355	70
4.5	240	3	10.8	15,354	21	48	7	HCH-451	NS	331280	HCH-451M	NS	332363	70
4.5	480	3	5.4	15,354	21	48	7	HCH-451	NS	331299	HCH-451M	NS	332371	70
4.5	480	3	5.4	15,354	21	48	7	HCH-451 (4W)	NS	331336	HCH-451M (4W)	NS	332419	70
4.5	550	3	4.7	15,354	21	48	7	HCH-451	NS	331301	HCH-451M	NS	332380	70
4.5	575	3	4.5	15,354	21	48	7	HCH-451	NS	331310	HCH-451M	NS	332398	70
4.5	600	3	4.3	15,354	21	48	7	HCH-451	NS	331328	HCH-451M	NS	332400	70
5	208	1	24	17,060	21	48	7	HCH-501	NS	331344	HCH-501M	NS	332427	70
5	208	3	13.9	17,060	21	48	7	HCH-501	NS	331387	HCH-501M	NS	332460	70
5	240	1	20.1	17,060	21	48	7	HCH-501	NS	331352	HCH-501M	NS	332435	70
5	240	3	12	17,060	21	48	7	HCH-501	NS	331395	HCH-501M	NS	332478	70
5	277	1	18.1	17,060	21	48	7	HCH-501	NS	331360	HCH-501M	NS	332443	70
5	480	1	10.4	17,060	21	48	7	**HCH-501**	**S**	**331379**	HCH-501M	NS	332451	70
5	480	3	6	17,060	21	48	7	HCH-501	NS	331408	HCH-501M	NS	332486	70
5	480	3	6	17,060	21	48	7	HCH-501 (4W)	NS	331440	HCH-501M (4W)	NS	332523	70
5	550	3	5.3	17,060	21	48	7	HCH-501	NS	331416	HCH-501M	NS	332494	70
5	575	3	5	17,060	21	48	7	HCH-501	NS	331424	HCH-501M	NS	332507	70
5	600	3	4.8	17,060	21	48	7	HCH-501	NS	331432	HCH-501M	NS	332515	70

Stock Status: **S** = stock AS = assembly stock NS = non-stock
To Order—Specify model, PCN, kW, volts, phase and quantity.

Note — (4W) represents 4 wire.

EH & HVT

Industrial Convection Heaters

- **Without Thermostat (type EH)**
- **With Thermostat (type HVT)**
- **250 - 1,000 Watts**
- **853 - 3,412 Btuh**
- **120 and 240 Volt**
- **Single Phase**

Dimensions (Inches)

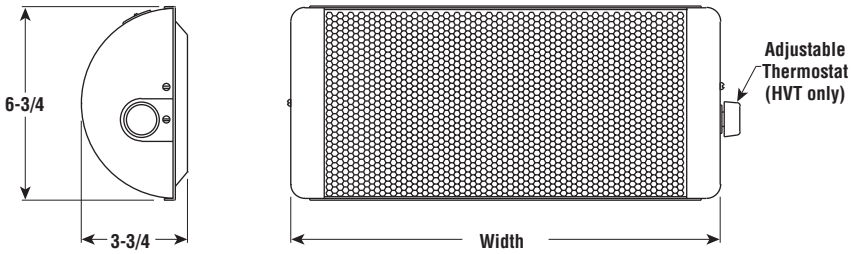

Description

EH and HVT industrial convection heaters are designed for the highest dependability for rough plant areas and small manned or unattended areas.

Applications

- Crane Cabs
- Shop Offices
- Small Plant Areas
- Non-Hazardous Pump Sheds

Construction

Cabinet — Heavy gauge perforated steel case finished in corrosion resistant almond polyester powder coat paint.

Heating Elements are strip type construction and are the most rugged, durable, long-lasting elements available to industry.

Built-in Thermostat — (HVT only). Furnished standard to provide temperatures from 50°F - 110°F.

Advantages

- Long Life
- Rugged for High Traffic Areas
- Easy Installation
- Corrosion Resistant

CAUTION — Not intended for use where flammable vapors, gases, liquids or other combustible atmospheres are present.

Specifications and Ordering Information

kW	Volts	Phase	Amps	Btuh	Dimensions (In.) Height	Width	Depth	Model	Stock	PCN	Wt. (Lbs.)
EH — Without Thermostat											
0.25	120	1	2.1	853	6-3/4	14-5/8	3-3/4	**EH-1221**	**S**	**261833**	7
0.25	240	1	1	853	6-3/4	14-5/8	3-3/4	EH-1221	NS	261841	7
0.5	120	1	4.2	1,706	6-3/4	14-5/8	3-3/4	**EH-1251**	**S**	**261850**	7
0.5	240	1	2.1	1,706	6-3/4	14-5/8	3-3/4	**EH-1251**	**S**	**261868**	7
HVT — With Thermostat											
0.5	120	1	4.2	1,706	6-3/4	28-5/8	3-3/4	**HVT-1251**	**S**	**240055**	13
1	120	1	8.3	3,412	6-3/4	28-5/8	3-3/4	**HVT-2411**	**S**	**240071**	15

Stock Status: S = stock AS = assembly stock NS = non-stock
To Order—Specify model, PCN, kW, volts, phase and quantity.

Refer to WR-80, WR-90 in the Controls section.

H
Horizontal Convection Heater

- 1 - 3 kW
- 3,412 - 10,236 Btuh
- 120, 240 and 480 Volt
- Single Phase

Dimensions (Inches)

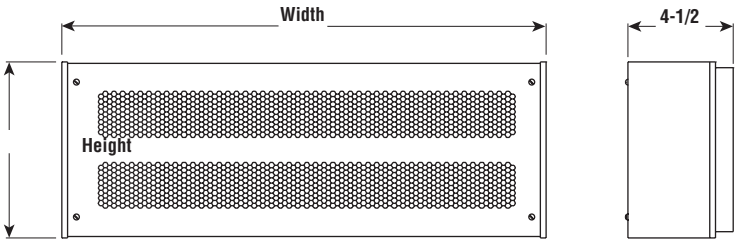

Description

Type H horizontal convection heaters are designed for the highest dependability for rugged plant areas and small manned or unattended areas.

Applications

- Crane Cabs
- Shop Offices
- Small Plant Areas
- Non-Hazardous Pump Sheds

Construction

Cabinet — Heavy gauge perforated steel case finished in corrosion resistant black polyester powder coat paint.

Heating Elements are strip type construction and are the most rugged, durable, long-lasting elements available to industry.

CAUTION — Not intended for use where flammable vapors, gases, liquids or other combustible atmospheres are present.

Advantages

- Long Life
- Durable for High Traffic Areas
- Easy Installation
- Corrosion Resistant

Specifications and Ordering Information

kW	Volts	No. Elem.	Amps	Btuh	Dimensions (In.) Height	Width	Depth	Model	Stock	PCN	Wt. (Lbs.)
1	120	2	8.3	3,412	7-1/2	20-3/4	4-1/2	**H-1801**	**S**	**261948**	28
1	240	2	4.2	3.412	7-1/2	20-3/4	4-1/2	H-1801	NS	261956	28
1.5	120	2	12.5	5,118	7-1/2	26-1/2	4-1/2	H-2405	NS	262000	30
1.5	240	2	6.3	5,118	7-1/2	26-1/2	4-1/2	**H-2405**	**S**	**262019**	30
1.5	480	2	3.1	5,118	7-1/2	26-1/2	4-1/2	H-2405	NS	262027	30
2	120	4	16.7	6,824	11-1/4	26-1/2	4-1/2	**H-2406**	**S**	**262060**	32
2	240	4	8.3	6,824	11-1/4	26-1/2	4-1/2	**H-2406**	**S**	**262078**	32
2	480	4	4.2	6,824	11-1/4	26-1/2	4-1/2	**H-2406**	**S**	**262086**	32
3	240	4	12.5	10,236	11-1/4	26-1/2	4-1/2	**H-2407**	**S**	**262131**	32
3	480	4	6.3	10,236	11-1/4	26-1/2	4-1/2	**H-2407**	**S**	**262140**	32

Stock Status: **S** = stock AS = assembly stock NS = non-stock
To Order—Specify model, PCN, kW, volts, phase and quantity.

Refer to WR-80, WR-90 in the Controls section.

V
Vertical Convection Heater

- 2 - 4.5 kW
- 6,824 - 15,354 Btuh
- 120, 240 and 480 Volt
- Single Phase

Dimensions (Inches)

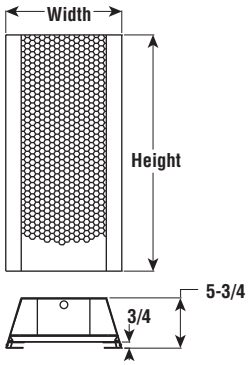

Description

Type V vertical convection heaters are designed for the highest dependability for rugged plant areas and small manned or unattended areas.

Applications

- Crane Cabs
- Shop Offices
- Small Plant Areas
- Non-Hazardous Pump Sheds

Construction

Cabinet — Heavy gauge perforated steel case finished in corrosion resistant black polyester powder coat paint.

Heating Elements are strip type construction and are the most rugged, durable, long-lasting elements available to industry.

CAUTION — Not intended for use where flammable vapors, gases, liquids or other combustible atmospheres are present.

Advantages

- Long Life
- Durable for High Traffic Areas
- Easy Installation
- Corrosion Resistant
- Low Maintenance

Specifications and Ordering Information

kW	Volts	No. Elem.	Amps	Btuh	Dimensions (In.) Height	Width	Depth	Model	Stock	PCN	Wt. (Lbs.)
2	240	4	8.3	6,824	27	12-3/4	5-3/4	V-2020	NS	262254	34
3	240	4	12.5	10,236	27	12-3/4	5-3/4	**V-2030**	**S**	**262318**	34
3	480	4	6.3	10,236	27	12-3/4	5-3/4	V-2030	NS	262326	34
4.5	120	6	25	10,236	27	17-3/4	5-3/4	V-2040	NS	262369	44
4.5	240	6	18.8	15,354	27	17-3/4	5-3/4	**V-2040**	**S**	**262377**	44
4.5	480	6	9.4	15,354	27	17-3/4	5-3/4	**V-2040**	**S**	**262385**	44

Stock Status: **S** = stock AS = assembly stock NS = non-stock
To Order—Specify model, PCN, kW, volts, phase and quantity.

Refer to WR-80, WR-90 in the Controls section.

CPHH

Pump House Convection Heater

- **500 Watts**
- **1,706 Btuh**
- **120 and 240 Volt**
- **Single Phase**

Dimensions (Inches)

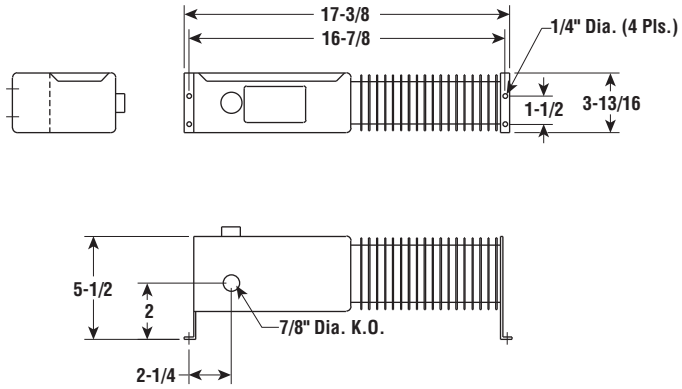

Description

CPHH pump house heaters provide around the clock freeze protection or heat anywhere it's needed. The heater features a built-in thermostat and can be left unattended all winter long. The rugged cast grid heating element can withstand most any environment.

Applications

- Boiler Rooms
- Water Pump Sheds (golf course)
- Garage Grease Pits
- Equipment Buildings
- Control Panels

Construction

Control Enclosure — Heavy gauge formed steel corrosion treated and painted with a hybrid polyester epoxy coating.

Heating Element — Cast aluminum heating grid.

Control — Built-in bimetallic adjustable thermostat with 40 to 80°F range.

CAUTION — Not intended for use where flammable vapors, gases, liquids or other combustible atmospheres are present.

Advantages

- Long Life
- Self Contained
- For Unattended Locations
- Corrosion Resistant

Specifications and Ordering Information

Electrical					Dimensions (In.)			Ordering			Wt. (Lbs.)
kW	Volts	No. Elem.	Amps	Btuh	Height	Width	Depth	Model	Stock	PCN	
0.5	120	1	4.2	1,707	2-1/2	18-7/8	6-1/8	**CPHH-50011**	**S**	**350190**	5
0.5	240	1	2.1	1,707	2-1/2	18-7/8	6-1/8	**CPHH-50031**	**S**	**350203**	5

Stock Status: S = stock AS = assembly stock NS = non-stock
To Order—Specify model, PCN, kW, volts, phase and quantity.

ICH
Institutional Convection Heater

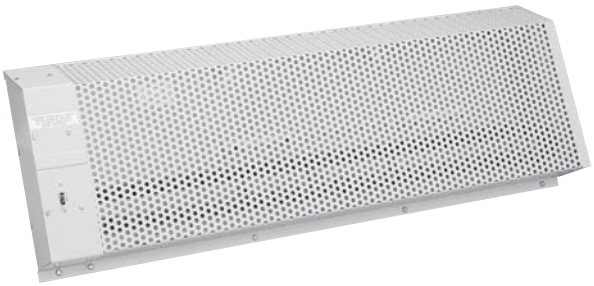

- **250 - 1,500 Watts**
- **1,706 - 5,118 Btuh**
- **120, 208, 240 and 277 Volt**
- **Single Phase**
- **Tamper-Resistant Construction**

Description

Institutional ICH convection heater is designed for exceptionally abusive conditions found in correctional institutions. The unit features a low operating temperature, safe for use in rehabilitation institutions

Applications

- Prisons
- Hospitals
- Mental Institutions
- Schools
- Day Care Centers

Construction

Cabinet Front Panel — Extra heavy perforated 12 gauge steel for long life and durability where intentional damage is expected. The almond powder coat finish provides a good, clean appearance.

Cabinet Rear Panel — Heavy 16 gauge zinc chromate treated steel, for corrosion resistance.

Cabinet End Panels are 14 gauge steel.

Tamper Proof Screws are special screws to prevent unauthorized entry.

Heating Elements — Long lasting metal sheath Fintube® elements.

Dimensions (Inches)

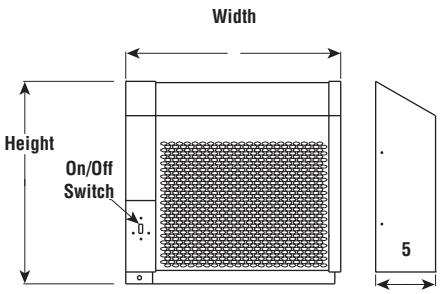

Features

- Linear High Temperature Limit Control
- Heavy-duty On/Off External Switch
- Heavy-duty On/Off Internal Switch (Optional)
- Tamperproof Thermostat 40°F - 90°F.

Advantages

- Clean and Safe
- Maximum Surface Temperature will not Exceed 140°F in 70°F Ambient
- Tamper-Resistant
- Built-in Thermostat
- Low Cabinet Temperature
- Easy Installation
- Long Life
- Low Maintenance

Specifications and Ordering Information

kW	Volts	No. Elem.	Amps	Btuh	Dimensions (In.) Height	Width	Depth	Model	Stock	PCN	Wt. (Lbs.)
0.25	120	1	2.1	853	16	18-1/8	5	ICH-18025	NS	228013	45
0.5	120	1	4.2	1,707	16	28-1/8	5	ICH-28050	NS	228021	45
0.5	208	1	2.4	1,707	16	28-1/8	5	ICH-28050	NS	228030	45
0.5	240	1	2.1	1,707	16	28-1/8	5	ICH-28050	NS	228048	45
0.5	277	1	1.8	1,707	16	28-1/8	5	ICH-28050	NS	228056	45
0.75	120	1	6.3	2,559	16	38-1/8	5	ICH-38075	NS	228064	55
0.75	208	1	3.6	2,559	16	38-1/8	5	ICH-38075	NS	228072	55
0.75	240	1	3.1	2,559	16	38-1/8	5	ICH-38075	NS	228080	55
0.75	277	1	2.7	2,559	16	38-1/8	5	ICH-38075	NS	228099	55
1	120	1	8.3	3,412	16	48-1/8	5	ICH-48100	NS	228101	65
1	208	1	4.8	3,412	16	48-1/8	5	ICH-48100	NS	228110	65
1	240	1	4.2	3,412	16	48-1/8	5	ICH-48100	NS	228128	65
1	277	1	3.6	3,412	16	48-1/8	5	ICH-48100	NS	228136	65
1.25	120	1	10.4	4,265	16	60-1/8	5	ICH-60125	NS	228144	80
1.25	208	1	6	4,265	16	60-1/8	5	ICH-60125	NS	228152	80
1.25	240	1	5.2	4,265	16	60-1/8	5	ICH-60125	NS	228160	80
1.25	277	1	4.5	4,265	16	60-1/8	5	ICH-60125	NS	228179	80
1.5	120	1	12.5	5,118	16	72-1/8	5	ICH-72150	NS	228187	95
1.5	208	1	7.2	5,118	16	72-1/8	5	ICH-72150	NS	228195	95
1.5	240	1	6.3	5,118	16	72-1/8	5	ICH-72150	NS	228208	95
1.5	277	1	5.4	5,118	16	72-1/8	5	ICH-72150	NS	228216	95

Stock Status: **S** = stock AS = assembly stock NS = non-stock
To Order—Specify model, PCN, kW, volts, phase and quantity.

CVEP

Explosion Proof Convection Heater

- **1.6 - 9 kW**
- **5,459 - 30,708 Btuh**
- **120, 208, 240, 277, 480 and 575 Volt**
- **1 & 3 Phase**
- **Built-in & Prewired Control Options**
- **UL Listed and CSA Certified for Class 1, Division 1 or 2, Group B, C & D Environments**
- **CE Approved Models Available**

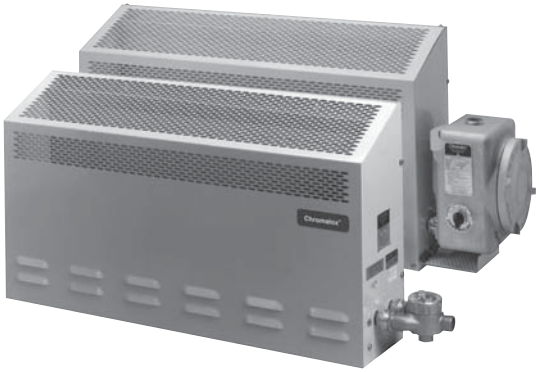

Description

Type CVEP explosion proof convection heater is designed to provide a rugged, corrosion-resistant heat source for areas where volatile flammable liquids, gases or vapors are present. All basic models without controls are UL listed and CSA certified for use in areas designated as Class 1, Division 1 or 2 Group B, C or D locations.

Applications

- Petroleum Refineries, Gasoline Storage and Dispensing Areas
- Industrial Areas Using Flammable Liquids in Dip Tanks
- Petroleum Refineries
- Dry Cleaning Plants
- Utility and Natural Gas Plants
- Aircraft Hangers/Fueling Areas
- Solvent Extraction Plants
- Storage Areas for Flammable Products or Batteries
- Sewage Treatment Plants
- Hydrogen Atmospheres

Refer to WR-80EP in the Controls section.

Dimensions (Inches)

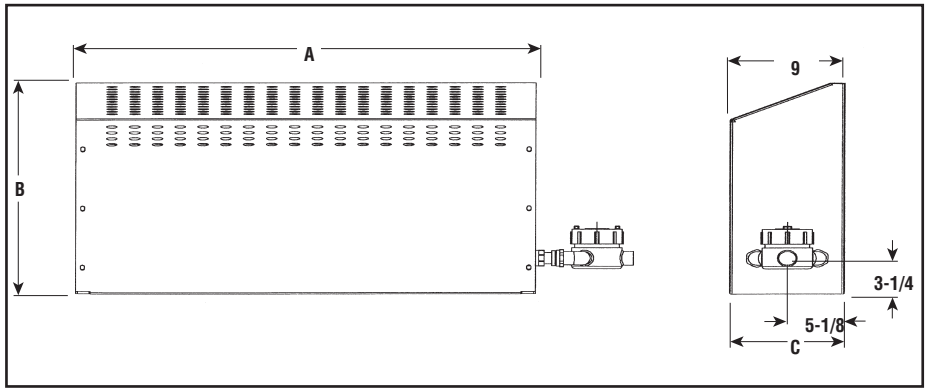

Dimensions (Inches)

kW	A	B	C
1.6, 1.8 and 3.6	34	20	9
3.2 and 7.6	58	20	9
4.0, 4.5 and 9.0	70	20	9

Construction

Cabinet — Sloped top, constructed of heavy 16 gauge steel, polyester powder coated for maximum corrosion resistance.

Explosion Proof Junction Box — For conduit entry and ease of power wiring.

Heating Elements — Sealed, metal sheath, heavy-duty, low watt density, enclosed high grade resistance wire embedded in MgO refractory core. Elements are inserted in a copper tube with aluminum fins.

Features

Integral Mounting Brackets allow for easy wall installation.

Sloped Top Cabinet ensures maximum ventilation by preventing objects from being placed on the top which would restrict air flow.

Designed for Areas Classified

- Class I, Division 1 or 2, Groups B, C, D
- Temperature Code T3A 180°C (356°F) or T2A 280°C (536°F)

Optional Features (Factory Installed)

- Thermostat
- Magnetic Contactor
- Control Voltage Transformer

Advantages

- Easy Installation
- Clean, Safer Heat Source
- Pre-Wired Control Options
- Long Life

CVEP
Convection Heater For Hazardous Locations *(cont'd.)*

Specifications and Ordering Information

Electrical					Model	Stock	PCN	Wt. (Lbs.)
kW	Volts	Phase	Amps	Btuh				
Temperature Code T3A (356°F, 180°C) Group B, C, and D								
1.6	208	1	7.7	5,500	CVEP-16-81-00-00	NS	088336	58
1.6	208	3	4.5	5,500	CVEP-16-83-00-00	NS	086844	58
1.6	240	1	6.7	5,500	CVEP-16-21-00-00	NS	086852	58
1.6	240	3	3.8	5,500	CVEP-16-23-00-00	NS	086860	58
1.6	277	1	5.8	5,500	CVEP-16-71-00-00	NS	086879	58
1.6	480	1	3.3	5,500	CVEP-16-41-00-00	NS	086887	58
1.6	480	3	1.9	5,500	CVEP-16-43-00-00	NS	086895	58
1.6	575	1	2.8	5,500	CVEP-16-61-00-00	NS	086908	58
3.2	208	1	15.4	11,000	CVEP-32-81-00-00	NS	086916	94
3.2	208	3	9.0	11,000	CVEP-32-83-00-00	NS	086924	94
3.2	240	1	13.3	11,000	CVEP-32-21-00-00	NS	086932	94
3.2	240	3	7.7	11,000	CVEP-32-23-00-00	NS	086940	94
3.2	277	1	11.6	11,000	CVEP-32-71-00-00	NS	086959	94
3.2	480	1	6.7	11,000	CVEP-32-41-00-00	NS	086967	94
3.2	480	3	3.8	11,000	CVEP-32-43-00-00	NS	086975	94
3.2	575	1	5.6	11,000	CVEP-32-61-00-00	NS	086983	94
4	208	1	19.2	13,600	CVEP-40-81-00-00	NS	086991	112
4	208	3	11.1	13,600	CVEP-40-83-00-00	NS	087003	112
4	240	1	16.7	13,600	CVEP-40-21-00-00	NS	087011	112
4	240	3	9.6	13,600	CVEP-40-23-00-00	NS	087020	112
4	277	1	14.4	13,600	CVEP-40-71-00-00	NS	087038	112
4	480	1	8.3	13,600	CVEP-40-41-00-00	NS	087046	112
4	480	3	4.8	13,600	CVEP-40-43-00-00	NS	087054	112
4	575	1	7	13,600	CVEP-40-61-00-00	NS	087062	112
Temperature Code T2A (536°F, 280°C) Group B, C, and D								
1.8	120	1	15	6,140	**CVEP-18-11-00-00**	**S**	**028759**	46
1.8	208	1	8.7	6,140	**CVEP-18-81-00-00**	**S**	**028767**	46
1.8	208	3	5	6,140	CVEP-18-83-00-00	NS	028775	46
1.8	240	1	7.5	6,140	**CVEP-18-21-00-00**	**S**	**028783**	46
1.8	240	3	4.4	6,140	CVEP-18-23-00-00	NS	028791	46
1.8	277	1	6.5	6,140	CVEP-18-71-00-00	NS	028804	46
1.8	480	1	3.7	6,140	CVEP-18-41-00-00	NS	028812	46
1.8	480	3	2.2	6,140	CVEP-18-43-00-00	NS	028820	46
3.6	208	1	17.3	12,300	**CVEP-36-81-00-00**	**S**	**087070**	58
3.6	208	3	10	12,300	CVEP-36-83-00-00	NS	087089	58
3.6	240	1	15	12,300	**CVEP-36-21-00-00**	**S**	**087097**	58
3.6	240	3	8.7	12,300	CVEP-36-23-00-00	NS	087100	58
3.6	277	1	13	12,300	**CVEP-36-71-00-00**	**S**	**087118**	58
3.6	480	1	7.5	12,300	**CVEP-36-41-00-00**	**S**	**087126**	58
3.6	480	3	4.3	12,300	CVEP-36-43-00-00	NS	087134	58
3.6	575	1	6.3	12,300	CVEP-36-61-00-00	NS	087142	58
7.6	208	1	36.5	24,000	CVEP-76-81-00-00	NS	085913	94
7.6	208	3	21.1	24,000	CVEP-76-83-00-00	NS	085921	94
7.6	240	1	31.7	24,000	CVEP-76-21-00-00	NS	085930	94
7.6	240	3	18.3	24,000	CVEP-76-23-00-00	NS	085948	94
7.6	277	1	27.4	24,000	CVEP-76-71-00-00	NS	085956	94
7.6	480	1	15.8	24,000	CVEP-76-41-00-00	NS	085964	94
7.6	480	3	9.2	24,000	CVEP-76-43-00-00	NS	085972	94
7.6	575	1	13.2	24,000	CVEP-76-61-00-00	NS	085980	94
9	208	1	43.3	30,700	CVEP-90-81-00-00	NS	087230	112
9	208	3	25	30,700	CVEP-90-83-00-00	NS	087249	112
9	240	1	37.5	30,700	CVEP-90-21-00-00	NS	087257	112
9	240	3	21.7	30,700	CVEP-90-23-00-00	NS	087265	112
9	277	1	32.5	30,700	CVEP-90-71-00-00	NS	087273	112
9	480	1	18.8	30,700	CVEP-90-41-00-00	NS	087281	112
9	480	3	10.8	30,700	CVEP-90-43-00-00	NS	087290	112
9	575	1	15.7	30,700	CVEP-90-61-00-00	NS	087302	112
Stock CVEP with Built-in Thermostat								
1.8	120	1	15	6,140	**CVEP-18-11-00-42**	**S**	**028839**	59
1.8	208	1	8.7	6,140	**CVEP-18-81-00-42**	**S**	**028847**	59
1.8	240	1	7.5	6,140	CVEP-18-21-00-42	NS	028855	59
1.8	277	1	6.5	6,140	CVEP-18-71-00-42	NS	028863	59
1.8	480	1	3.7	6,140	CVEP-18-41-32-42[1]	NS	028871	69
3.6	208	1	17.3	12,300	**CVEP-36-81-00-42**	**S**	**028644**	60
3.6	240	1	15	12,300	**CVEP-36-21-00-42**	**S**	**028660**	60
3.6	480	1	7.5	12,300	CVEP-36-41-32-42[1]	NS	028652	70

Stock Status: **S** = stock AS = assembly stock NS = non-stock
To Order—Specify model, PCN, kW, volts, phase and quantity.
CE approved models available. Contact your Chromalox representative.

Note —
1. Includes control transformer and contactor
2. Other sizes and configurations available, contact your Local Chromalox Sales office.

CVEP

Explosion Proof Convection Heater *(cont'd.)*

Ordering Information

To Order — Complete the Model Number using the Matrix provided.

Power & Temp. Control Options

Power Control Combination	Thermostat Option	Figure Number
00	00	1
00	40[1]	5
00	42[2]	2
30 - 35	00	4
30 - 35	40	5
30 - 35	42	3

[1] **Thermostat option: 40**
Temperature range: 40˚ - 90˚F
Electrical Rating: 25 Amp 24V, 120V, 240V AC 22 Amp 277 VAC Higher Voltage or 3 phase requires magnetic contactor option and transformer

[2] **Thermostat option: 42**
Temperature range: 50˚ - 90˚F
Electrical Rating: 22 Amps 125/277 VAC Higher Voltage or 3 phase requires magnetic contactor option and transformer

Model	Explosion Proof Convection Heater
CVEP	

Code	Watts	Code	Watts
16	1600	**40**	4000
18	1800	**45**	4500
32	3200	**76**	7600
36	3600	**90**	9000

Code	Voltage	Code	Voltage
1	120	**6**	575
2	240	**7**	277
3	380	**8**	208
4	480	**9**	600
5	415		

Code	Phase
1	Single
3	Three

Code	Power Control Options (See Options Table)
00	no transformer no contactor
30	(24V) transformer and contactor
31	no transformer with contactor(24V)
32	(120V) transformer and contactor
33	no transformer with contactor(120V)
34	no transformer with contactor(208/240V)
35	no transformer with contactor(277V)

Code	Thermo/Class Options (See Options Table)
00	no thermo B, C & D
40	thermo in box B, C & D
42	thermo C & D

CVEP	16	1	1	30	42	Typical Model Number

CE approved models available. Contact your Chromalox representative.

Dimensions (Inches)

Figure 1

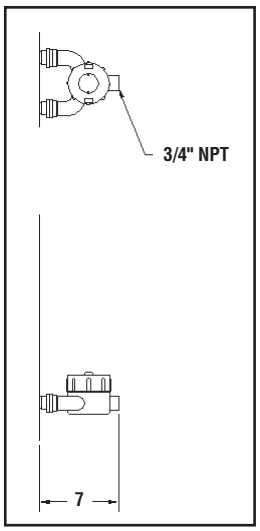

Figure 2

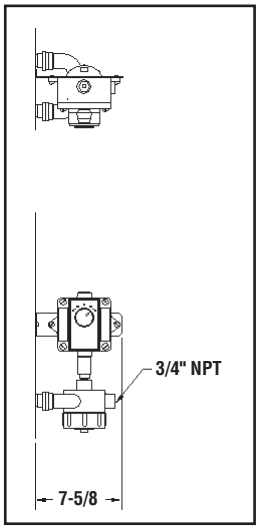

Figure 3

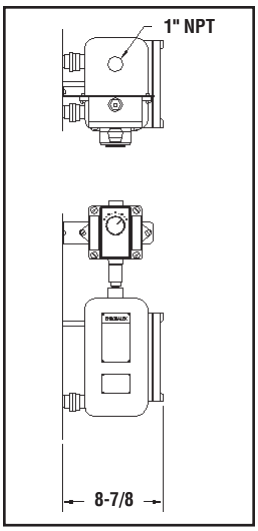

Figure 4

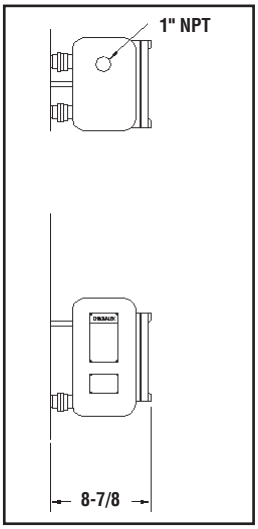

Figure 5

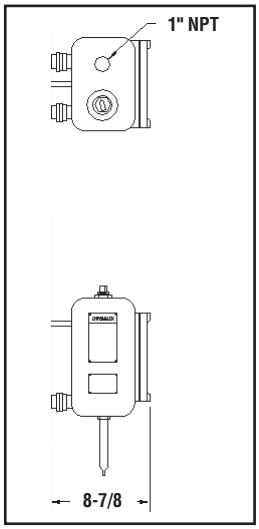

CVEP Convection Heater For Hazardous Locations *(cont'd.)*

Sample Specifications – U.S. approved models

1. General

1.1 The Explosion-Proof Convection Air Heater Catalog Number _____ Rated _____ Volts, _____ Phase, _____ Watts, shall be designed and constructed for use in hazardous locations.

1.2 ☐ For Groups B, C and D Check This Block
The Heater shall be Underwriters Laboratories Inc. Listed and Canadian Standards Association Certified for constant use in Class I, Groups B, C and D Division 1 or 2 hazardous locations, and National Electric Code minimum gas ignition temperature identification number ☐ T2A, 280°C (536° F) or ☐ T3A, 180°C (356°F).

1.3 ☐ For Groups C and D Check This Block
The Heater shall be Underwriters Laboratories Inc. Listed and Canadian Standards Association Certified for constant use in Class I, Groups C and D Division 1 or 2 hazardous locations, and National Electric Code minimum gas ignition temperature identification number ☐ T2A, 280°C (536°F) or ☐ T3A, 180°C (356°F).

1.4 ☐ For Group D Check This Block
The heater shall be Underwriters Laboratories Inc. Listed and Canadian Standards Association Certified for constant use in Class 1, Group D Division 1 or 2 hazardous locations, and National Electric Code minimum gas ignition temperature identification number ☐ T2A, 280°C (536°F) or ☐T3A, 180°C (356°F).

1.5 The Heater shall be the natural convection type intended for wall mounting.

2. Construction

2.1 The back panel shall be designed to be easily mounted to the wall using keyhole slots.

2.2 The back panel shall be fabricated for 16 gauge steel, 9" deep by 20" high, finished with corrosion resistant polyester powder coating.

2.3 The back panel shall include perforations and a baffle to direct outside air between the panel and the mounting surface.

2.4 The front cabinet shall be easily removable by unthreading 4 bolts from threaded inserts.

2.5 The front cabinet shall be fabricated from 16 gauge steel. 9" deep by 20" high, and coated with corrosion resistant polyester powder coating.

2.6 The front cabinet shall be sloped to prevent objects from being placed on top causing restricted air flow.

3. Elements

3.1 The elements shall be constructed of heavy duty resistance wire insulated by magnesium oxide refractory, which has been highly compacted to transmit heat and act as an electrical insulator.

3.2 The elements are to be contained in a tube assembly, which is then swaged to an O.D. of 1.25".

3.3 The element assembly is inserted into a copper tube with 3" x 3.25" aluminum fins spaced at 48 fins per linear foot.

3.4 The finned assembly is to be mounted to the rear panel by polyester powder-coated brackets.

4. Controls (Optional)

4.1 The CVEP shall include the following built in control features:
☐ operating temperature control
☐ magnetic contactor
☐ control transformer with ☐ 120V ☐ 24V secondary

4.2 The control components shall be factory installed, wired and tested.

5. Terminal Box (For units without transformer or contactor options)

The terminal box shall be constructed of copper free aluminum, to include a grounding lug and to be U.L. listed for Class I hazardous locations (as indicated in 1. General Specifications above.)

FPEP & CEP-15

Explosion Proof Convection Heaters

FPEP

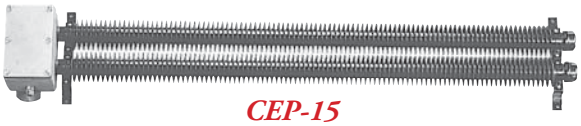

CEP-15

- **200 to 1,500 Watts**
- **682 - 5,118 Btuh**
- **120, 208, 240, 277, 480 and 600 Volt**
- **Single Phase**

Description

The FPEP and CEP heaters have been especially engineered and constructed for supplying heat in areas containing hazardous vapors, gases and dusts.

Applications

- Refineries
- Gas Generator Rooms
- Grain Handling Areas
- Mines
- Sewage Pumping Stations

Construction

- Heating Surface Constructed of Schedule 40 Finned Pipe
- Cast Alloy® Explosion Proof Terminal Enclosure
- Elements Consist of 4 INCOLOY® Sheath Tubular Heaters

Dimensions (Inches)

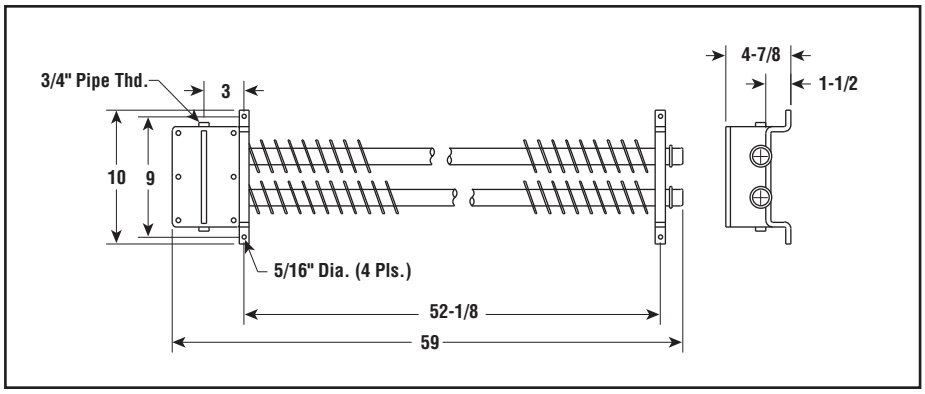

Designed for Areas Classified

- Class I, Groups C, D
  Temperature Code T3C 160°C (320°F)
- Class II, Groups E, F, G
  Temperature Code T3B 165°C (329°F)
- Class III

Advantages

- Long Life
- Safe for Dusty Environments
- Easy Installation
- Corrosion Resistant

Specifications and Ordering Information

Electrical					Dimensions (In.)			Ordering			
Watts	Volts	No. Elem.	Amps	Btuh	Height	Width	Depth	Model	Stock	PCN	Wt. (Lbs.)
FPEP — One Finned Element											
200	120	1	1.7	682	5	21-5/8	5-3/4	FPEP-200211	NS	350000	14
400	120	1	3.3	1,365	5	34-1/2	5-3/4	FPEP-400211	NS	350019	19
400	208	1	1.9	1,365	5	34-1/2	5-3/4	FPEP-400221	NS	350027	19
400	240	1	1.7	1,365	5	34-1/2	5-3/4	FPEP-400231	NS	350035	19
500	120	1	4.2	1,706	5	40-1/8	5-3/4	FPEP-500211	NS	350043	24
500	208	1	2.4	1,706	5	40-1/8	5-3/4	FPEP-500221	NS	350051	24
500	240	1	2.1	1,706	5	40-1/8	5-3/4	FPEP-500231	NS	350060	24
750	120	1	6.3	2,559	5	57-7/8	5-3/4	FPEP-750211	NS	350078	34
750	208	1	3.6	2,559	5	57-7/8	5-3/4	FPEP-750221	NS	350086	34
750	240	1	3.1	2,559	5	57-7/8	5-3/4	FPEP-750231	NS	350094	34
1,000	120	1	8.3	3,412	5	78-7/8	5-3/4	FPEP-1000211	NS	350107	41
1,000	208	1	4.8	3,412	5	78-7/8	5-3/4	FPEP-1000221	NS	350115	41
1,000	240	1	4.2	3,412	5	78-7/8	5-3/4	FPEP-1000231	NS	350123	41
CEP-15 — Two Finned Elements											
1,500	120	1	12.5	5,118	10	59	4-7/8	**CEP-15C11**	**S**	**350131**	66
1,500	208	1	7.2	5,118	10	59	4-7/8	**CEP-15C21**	**S**	**350140**	66
1,500	240	1	6.3	5,118	10	59	4-7/8	**CEP-15C31**	**S**	**350158**	66
1,500	277	1	5.4	5,118	10	59	4-7/8	CEP-15C41	NS	350166	66
1,500	480	1	3.1	5,118	10	59	4-7/8	**CEP-15C71**	**S**	**350174**	66
1,500	600	1	2.5	5,118	10	59	4-7/8	**CEP-15C81**	**S**	**350182**	66

Stock Status: **S** = stock AS = assembly stock NS = non-stock
To Order—Specify model, PCN, watts, volts, phase and quantity.

Refer to WR-80EP in the Controls section.

CAF-6

Architectural Draft Barrier Convection Heater

- 500 - 2,500 Watts
- 1,706 - 8,530 Btuh
- 120, 208, 240 and 277 Volt
- Single Phase
- 24.3 - 120.3" Lengths
- 250 W/Ft.

Dimensions (Inches)

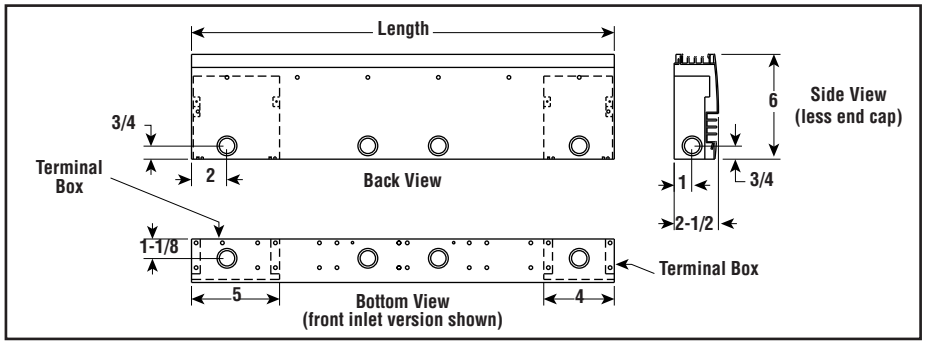

Applications

Ideal for commercial buildings under large windows or walls constructed of glass. For total or supplemental heat in:

- Lobbies
- Vestibules
- Hallways
- Corridors
- Banks
- Hospitals
- Condominiums
- Offices and Other Areas.

Construction

Painted Finish is hybrid polyester epoxy powder coat process. Clear and Bronze 40 are anodized aluminum finishes.

Standard — White, Almond, Clear Aluminum or Bronze 40 Aluminum.

Front and Top Surface is constructed of 14 gauge extruded aluminum with punched air intake and exhaust vents. Cabinet back and bottom are fabricated from satin coat steel with multiple knockouts for convenient power connection. Endcaps are field removable for continuous heater installation.

Stainless Steel Sheath encloses a nickel chromium element compacted in a mineral insulation. Aluminum fins are positively staked to the surface and provide superior heat transfer.

Choice of Cold Air Intake, front or bottom.

Custom — Contact your Local Chromalox Sales office.

Features

Full Length Thermal Protection.

Floating Element Suspension Minimizes Expansion Noise.

Built-in Wireway for Continuous Installation

Optional Built-in Tamperproof Thermostat or Adjustable Thermostat Controls may be mounted in either the left or right hand terminal box. Built-in low voltage controls, if specified, are located in the right hand terminal box. Power connection can be made at either end of the heater.

Advantages

- Easy Mounting and Wiring
- Advanced Architectural Low Profile Styling
- Attractive Appearance

Specifications and Ordering Information

Electrical					Dimensions (In.)			Ordering		Wt. (Lbs.)
Volts	Phase	Watts	Amps	Btuh	Height	Length	Depth	Model	Stock	
120	1	500	4.2	1,706	6	24.3	2.5	CAF-6F205	NS	18.7
208	1	500	2.4	1,706	6	24.3	2.5	CAF-6F205	NS	18.7
240	1	500	2.1	1,706	6	24.3	2.5	CAF-6F205	NS	18.7
277	1	500	1.8	1,706	6	24.3	2.5	CAF-6F205	NS	18.7
120	1	750	6.3	2,259	6	36.3	2.5	CAF-6F307	NS	25.4
208	1	750	3.6	2,259	6	36.3	2.5	CAF-6F307	NS	25.4
240	1	750	3.1	2,259	6	36.3	2.5	CAF-6F307	NS	25.4
277	1	750	2.7	2,259	6	36.3	2.5	CAF-6F307	NS	25.4
120	1	1,000	8.3	3,412	6	48.3	2.5	CAF-6F410	NS	32.1
208	1	1,000	4.8	3,412	6	48.3	2.5	CAF-6F410	NS	32.1
240	1	1,000	4.2	3,412	6	48.3	2.5	CAF-6F410	NS	32.1
277	1	1,000	3.6	3,412	6	48.3	2.5	CAF-6F410	NS	32.1
120	1	1,250	10.4	4,265	6	60.3	2.5	CAF-6F512	NS	40.2
208	1	1,250	6	4,265	6	60.3	2.5	CAF-6F512	NS	40.2
240	1	1,250	5.2	4,265	6	60.3	2.5	CAF-6F512	NS	40.2
277	1	1,250	4.5	4,265	6	60.3	2.5	CAF-6F512	NS	40.2
120	1	1,500	12.5	5,118	6	72.3	2.5	CAF-6F615	NS	48.2
208	1	1,500	7.2	5,118	6	72.3	2.5	CAF-6F615	NS	48.2
240	1	1,500	6.3	5,118	6	72.3	2.5	CAF-6F615	NS	48.2
277	1	1,500	5.4	5,118	6	72.3	2.5	CAF-6F615	NS	48.2
208	1	1,750	8.4	5,971	6	84.3	2.5	CAF-6F717	NS	57.6
240	1	1,750	7.3	5,971	6	84.3	2.5	CAF-6F717	NS	57.6
277	1	1,750	6.3	5,971	6	84.3	2.5	CAF-6F717	NS	57.6
208	1	2,000	9.6	6,824	6	96.3	2.5	CAF-6F820	NS	67.0
240	1	2,000	8.3	6,824	6	96.3	2.5	CAF-6F820	NS	67.0
277	1	2,000	7.2	6,824	6	96.3	2.5	CAF-6F820	NS	67.0
208	1	2,250	10.8	7,677	6	108.3	2.5	CAF-6F922	NS	77.7
240	1	2,250	9.4	7,677	6	108.3	2.5	CAF-6F922	NS	77.7
277	1	2,250	8.1	7,677	6	108.3	2.5	CAF-6F922	NS	77.7
208	1	2,500	12	8,530	6	120.3	2.5	CAF-6F025	NS	88.4
240	1	2,500	10.4	8,530	6	120.3	2.5	CAF-6F025	NS	88.4
277	1	2,500	9	8,530	6	120.3	2.5	CAF-6F025	NS	88.4

Stock Status: **S** = stock AS = assembly stock NS = non-stock
To Order—Specify model, watts, volts, phase and quantity.

CAF-6

Architectural Draft Barrier Convection Heater *(cont'd.)*

Ordering Information

To Order — Complete the Model Number using the Matrix provided.

Model **Architectural Draft Barrier Convection Heater**

CAF-6

Code	Inlet
F	Front
B	Bottom

Code	Length (Ft.)	Code	Length (Ft.)
2	2	**7**	7
3	3	**8**	8
4	4	**9**	9
5	5	**10**	10
6	6		

Code	Wattage (see table)

Code	Voltage/Phase	Code	Voltage/Phase
11	120/1	**31**	240/1
21	208/1	**41**	277/1

Code	Finish	Code	Finish
Painted		**Anodized**	
68	Almond	**07**	Bronze
02	White	**10**	Clear

Code	Control Options (factory installed)
A1	Built-in SP tamperproof thermostat 120 - 277V
A2	Built-in DP tamperproof thermostat 120 - 277V
F1	Built-in SP adjustable thermostat 120 - 277V
F2	Built-in DP adjustable thermostat 120 - 277V
A4	Built-in 24V low voltage relay 120 - 277V
A5	Built-in 24V low voltage relay and transformer 120 - 277V
A8	Built-in disconnect switch, rated 277V @ 20A
B1	Built-in SP tamperproof thermostat and disconnect
B2	Built-in DP tamperproof thermostat and disconnect
F3	Built-in SP adjustable thermostat and disconnect
F4	Built-in DP adjustable thermostat and disconnect
D1	Built-in low voltage relay and disconnect
D2	Built-in low voltage relay and transformer and disconnect

CAF-6	**B**	**3**	**07**	**11**	**68**	**A1**	**Typical Model Number**

Accessories (Field Installed)

ALPKS2 — Pedestal kit for units up to 4 feet in length (2 pedestals included)

ALPKS3 — Pedestal kit for units above 4 feet in length (3 pedestals included)

ALF6IC90 — Inside 90 degree corner

ALF6OC90 — Outside 90 degree corner

Filler Sections — Contact your Local Chromalox Sales office for available sizes.

CCAS-8

Architectural Slope Top Convection Heater

- 500 - 2,500 Watts
- 1,706 - 8,530 Btuh
- 120, 208, 240 and 277 Volt
- Single Phase
- 24.3 - 120.3" Lengths
- 250 W/Ft.

Applications

Ideally suited for heavily traveled areas such as:

- Factory Offices
- Assembly Areas
- Schools
- Laboratories
- Corridors
- Public Areas (hotels, etc.)
- Stairwell Landings.

Construction

Standard Finishes — White or Almond painted finish is hybrid polyester epoxy powder coat. Clear and Bronze 40 are anodized aluminum finishes.

Front and Slope Surface is constructed of 14 gauge extruded aluminum with punched air intake and exhaust vents. Cabinet back and bottom are fabricated from satin coat steel with multiple knockouts for convenient power connection. Endcaps are field removable for continuous heater installation.

Stainless Steel Sheath encloses a nickel chromium element compacted in a mineral insulation. Aluminum fins are positively staked to the surface and provide superior heat transfer.

Choice of Cold Air Intake, front or bottom.

Custom — Contact your Local Chromalox Sales office.

Features

Full Length Thermal Protection.

Dimensions (Inches)

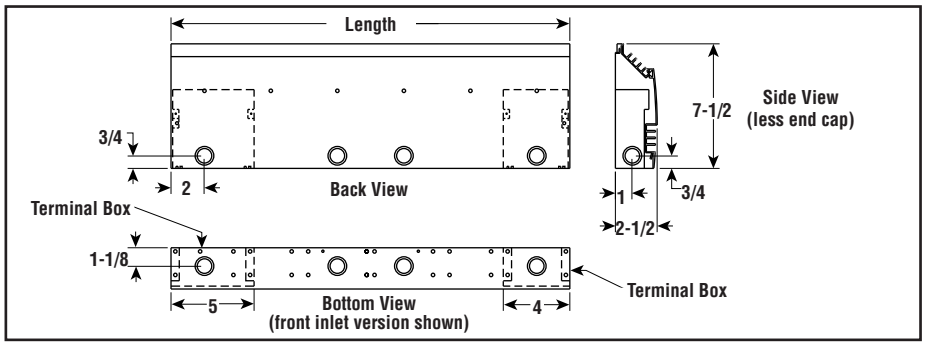

Floating Element Suspension Minimizes Expansion Noise.

Built-in Wireway for Continuous Installation.

Optional Built-in Tamperproof Thermostat or Adjustable Thermostat Controls may be mounted in either the left or right hand terminal box. Built-in low voltage relays, if specified, are located in the right hand terminal box. Power connection can be made at either end of the heater.

Advantages

- Sloped Top Prevents Storage Shelf Usage
- Easy Mounting and Wiring
- Low Noise
- Safer Operations Under Most Conditions
- Advanced Architectural Low Profile Styling
- Slope Top Prevents Blockage to Heat Flow

Specifications and Ordering Information

			Electrical		Dimensions (In.)			Ordering		Wt. (Lbs.)
Volts	Phase	Watts	Amps	Btuh	Height	Length	Depth	Model	Stock	
120	1	500	4.2	1,706	7.5	24.3	2.5	CCAS-8F205	NS	18.7
208	1	500	2.4	1,706	7.5	24.3	2.5	CCAS-8F205	NS	18.7
240	1	500	2.1	1,706	7.5	24.3	2.5	CCAS-8F205	NS	18.7
277	1	500	1.8	1,706	7.5	24.3	2.5	CCAS-8F205	NS	18.7
120	1	750	6.3	2,559	7.5	36.3	2.5	CCAS-8F307	NS	25.4
208	1	750	3.6	2,559	7.5	36.3	2.5	CCAS-8F307	NS	25.4
240	1	750	3.1	2,559	7.5	36.3	2.5	CCAS-8F307	NS	25.4
277	1	750	2.7	2,559	7.5	36.3	2.5	CCAS-8F307	NS	25.4
120	1	1,000	8.3	3,412	7.5	48.3	2.5	CCAS-8F410	NS	32.1
208	1	1,000	4.8	3,412	7.5	48.3	2.5	CCAS-8F410	NS	32.1
240	1	1,000	4.2	3,412	7.5	48.3	2.5	CCAS-8F410	NS	32.1
277	1	1,000	3.6	3,412	7.5	48.3	2.5	CCAS-8F410	NS	32.1
120	1	1,250	10.4	4,265	7.5	60.3	2.5	CCAS-8F512	NS	40.2
208	1	1,250	6	4,265	7.5	60.3	2.5	CCAS-8F512	NS	40.2
240	1	1,250	5.2	4,265	7.5	60.3	2.5	CCAS-8F512	NS	40.2
277	1	1,250	4.5	4,265	7.5	60.3	2.5	CCAS-8F512	NS	40.2
120	1	1,500	12.5	5,118	7.5	72.3	2.5	CCAS-8F615	NS	48.2
208	1	1,500	7.2	5,118	7.5	72.3	2.5	CCAS-8F615	NS	48.2
240	1	1,500	6.3	5,118	7.5	72.3	2.5	CCAS-8F615	NS	48.2
277	1	1,500	5.4	5,118	7.5	72.3	2.5	CCAS-8F615	NS	48.2
208	1	1,750	8.4	5,971	7.5	84.3	2.5	CCAS-8F717	NS	57.6
240	1	1,750	7.3	5,971	7.5	84.3	2.5	CCAS-8F717	NS	57.6
277	1	1,750	6.3	5,971	7.5	84.3	2.5	CCAS-8F717	NS	57.6
208	1	2,000	9.6	6,824	7.5	96.3	2.5	CCAS-8F820	NS	67.0
240	1	2,000	8.3	6,824	7.5	96.3	2.5	CCAS-8F820	NS	67.0
277	1	2,000	7.2	6,824	7.5	96.3	2.5	CCAS-8F820	NS	67.0
208	1	2,250	10.8	7,677	7.5	108.3	2.5	CCAS-8F922	NS	77.0
240	1	2,250	9.4	7,677	7.5	108.3	2.5	CCAS-8F922	NS	77.0
277	1	2,250	8.1	7,677	7.5	108.3	2.5	CCAS-8F922	NS	77.0
208	1	2,500	12	8,530	7.5	120.3	2.5	CCAS-8F025	NS	88.4
240	1	2,500	10.4	8,530	7.5	120.3	2.5	CCAS-8F025	NS	88.4
277	1	2,500	9	8,530	7.5	120.3	2.5	CCAS-8F025	NS	88.4

Stock Status: **S** = stock AS = assembly stock NS = non-stock
To Order—Specify model, watts, volts, phase and quantity.

CCAS-8

Architectural Slope Top Convection Heater *(cont'd.)*

Ordering Information

To Order — Complete the Model Number using the Matrix provided.

Model	Architectural Slope Top Convection Heater
CCAS-8	

Code	Inlet
F	Front
B	Bottom

Code	Length (Ft.)	Code	Length (Ft.)
2	2	**7**	7
3	3	**8**	8
4	4	**9**	9
5	5	**10**	10
6	6		

Code	Wattage (see table)

Code	Voltage/Phase	Code	Voltage/Phase
11	120/1	**31**	240/1
21	208/1	**41**	277/1

Code	Finish	Code	Finish
Painted		**Anodized**	
68	Almond	**07**	Bronze
02	White	**10**	Clear

Code	Control Options (factory installed)
A1	Built-in SP tamperproof thermostat 120 - 277V
A2	Built-in DP tamperproof thermostat 120 - 277V
F1	Built-in SP adjustable thermostat 120 - 277V
F2	Built-in DP adjustable thermostat 120 - 277V
A4	Built-in 24V low voltage relay 120 - 277V
A5	Built-in 24V low voltage relay and transformer 120 - 277V
A8	Built-in disconnect switch, rated 277V @ 20A
B1	Built-in SP tamperproof thermostat and disconnect
B2	Built-in DP tamperproof thermostat and disconnect
F3	Built-in SP adjustable thermostat and disconnect
F4	Built-in DP adjustable thermostat and disconnect

CCAS-8	**B**	**2**	**05**	**11**	**68**	**A1**	**Typical Model Number**

Accessories (Field Installed)

ALPKS2 — Pedestal kit for units up to 4 feet in length (2 pedestals included)

ALPKS3 — Pedestal kit for units above 4 feet in length (3 pedestals included)

ALS8IC90 — Inside 90 degree corner

ALS8OC90 — Outside 90 degree corner

Filler Sections — Contact your Local Chromalox Sales office for available sizes.

CCAS-12

Architectural Slope Top Convection Heater

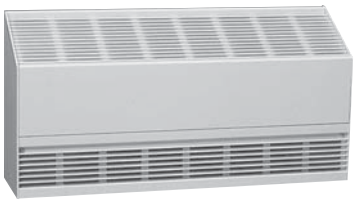

- 1,125 - 6,000 Watts
- 3,838 - 20,472 Btuh
- 208, 240, 277 and 480 Volt
- 1 & 3 Phase
- 24.3 - 96.3" Lengths
- 562 or 750 W/Ft.

Dimensions (Inches)

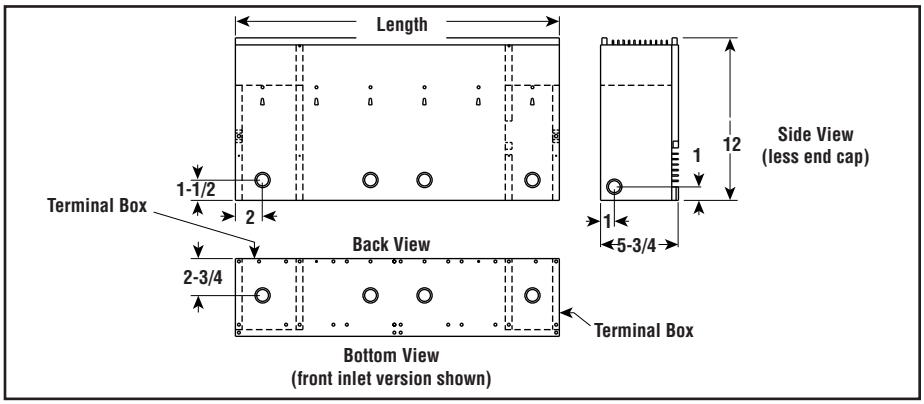

Applications

Ideally suited for heavily traveled areas such as:

- Factory Offices
- Assembly Areas
- Schools
- Laboratories
- Corridors
- Public Areas (Hotels, etc.)
- Stairwell Landings

Construction

Standard Finishes — White or Almond painted finish is hybrid polyester epoxy powder coat. Clear and Bronze 40 are anodized aluminum finishes.

Front and Slope Surface is constructed of 14 gauge extruded aluminum with punched air intake and exhaust vents. Cabinet back and bottom are fabricated from satin coat steel with multiple knockouts for convenient power connection. Endcaps are field removable for continuous heater installation.

Stainless Steel Sheath encloses a nickel chromium element compacted in a mineral insulation. Aluminum fins are positively staked to the surface and provide superior heat transfer.

Choice of Cold Air Intake, front or bottom.

Custom — Contact your Local Chromalox Sales office.

Features

Full Length Thermal Protection.

Floating Element Suspension Minimizes Expansion Noise.

Built-in Wireway for Continuous Installation.

Optional Built-in Tamperproof Thermostat Controls may be mounted in either the left or right hand terminal box. Built-in low voltage relays or contactors, if specified, are located in the right hand terminal box. Power connection can be made at either end of the heater.

Advantages

- Advanced Architectural Styling
- Sloped Top Prevents Storage Shelf Usage
- Easy Mounting and Wiring
- Low Noise
- Safer Operation Under Most Conditions

Specifications and Ordering Information

Electrical					Dimensions (In.)			Ordering		Wt. (Lbs.)
Volts	Phase	Watts	Amps	Btuh	Height	Length	Depth	Model	Stock	
208	1	1,125	5.4	3,838	12	24.3	5.75	CCAS-12F211	NS	50.9
208	3	1,125	3.1	3,838	12	24.3	5.75	CCAS-12F211	NS	50.9
240	1	1,125	4.7	3,838	12	24.3	5.75	CCAS-12F211	NS	50.9
277	1	1,125	4.1	3,838	12	24.3	5.75	CCAS-12F211	NS	50.9
208	1	1,500	7.2	5,118	12	24.3	5.75	CCAS-12F215	NS	50.9
208	3	1,500	4.2	5,118	12	24.3	5.75	CCAS-12F215	NS	50.9
240	1	1,500	6.3	5,118	12	24.3	5.75	CCAS-12F215	NS	50.9
277	1	1,500	5.4	5,118	12	24.3	5.75	CCAS-12F215	NS	50.9
480	3	1,500	1.8	5,118	12	24.3	5.75	CCAS-12F215	NS	50.9
208	1	1,687	8.1	5,756	12	36.3	5.75	CCAS-12F316	NS	64.3
208	3	1,687	4.7	5,756	12	36.3	5.75	CCAS-12F316	NS	64.3
240	1	1,687	7	5,756	12	36.3	5.75	CCAS-12F316	NS	64.3
277	1	1,687	6.1	5,756	12	36.3	5.75	CCAS-12F316	NS	64.3
480	3	1,687	2	5,756	12	36.3	5.75	CCAS-12F316	NS	64.3
208	1	2,250	10.8	7,677	12	48.3	5.75	CCAS-12F422	NS	77.7
208	3	2,250	6.3	7,677	12	48.3	5.75	CCAS-12F422	NS	77.7
240	1	2,250	9.3	7,677	12	48.3	5.75	CCAS-12F422	NS	77.7
277	1	2,250	8.1	7,677	12	48.3	5.75	CCAS-12F422	NS	77.7
480	3	2,250	2.7	7,677	12	48.3	5.75	CCAS-12F422	NS	77.7
208	1	3,000	14.4	10,236	12	48.3	5.75	CCAS-12F430	NS	77.7
208	3	3,000	8.3	10,236	12	48.3	5.75	CCAS-12F430	NS	77.7
240	1	3,000	12.5	10,236	12	48.3	5.75	CCAS-12F430	NS	77.7
277	1	3,000	10.8	10,236	12	48.3	5.75	CCAS-12F430	NS	77.7
480	3	3,000	3.6	10,236	12	48.3	5.75	CCAS-12F430	NS	77.7
208	1	3,375	16.2	11,515	12	72.3	5.75	CCAS-12F633	NS	104.5
208	3	3,375	9.4	11,515	12	72.3	5.75	CCAS-12F633	NS	104.5
240	1	3,375	14.1	11,515	12	72.3	5.75	CCAS-12F633	NS	104.5
277	1	3,375	12.2	11,515	12	72.3	5.75	CCAS-12F633	NS	104.5
480	3	3,375	4.1	11,515	12	72.3	5.75	CCAS-12F633	NS	104.5
208	1	4,500	21.6	15,354	12	72.3	5.75	CCAS-12F645	NS	104.5
208	3	4,500	12.5	15,354	12	72.3	5.75	CCAS-12F645	NS	104.5
240	1	4,500	18.8	15,354	12	72.3	5.75	CCAS-12F645	NS	104.5
277	1	4,500	16.2	15,354	12	72.3	5.75	CCAS-12F645	NS	104.5
480	3	4,500	5.4	15,354	12	72.3	5.75	CCAS-12F645	NS	104.5

CCAS-12

Architectural Slope Top Convection Heater *(cont'd.)*

Specifications and Ordering Information

Electrical					Dimensions (In.)			Ordering		Wt. (Lbs.)
Volts	Phase	Watts	Amps	Btuh	Height	Length	Depth	Model	Stock	
208	1	4,500	21.6	15,354	12	96.3	5.75	CCAS-12F845	NS	131.3
208	3	4,500	12.5	15,354	12	96.3	5.75	CCAS-12F845	NS	131.3
240	1	4,500	18.8	15,354	12	96.3	5.75	CCAS-12F845	NS	131.3
277	1	4,500	16.2	15,354	12	96.3	5.75	CCAS-12F845	NS	131.3
480	3	4,500	5.4	15,354	12	96.3	5.75	CCAS-12F845	NS	131.3
208	1	6,000	28.8	20,472	12	96.3	5.75	CCAS-12F860	NS	131.3
208	3	6,000	16.7	20,472	12	96.3	5.75	CCAS-12F860	NS	131.3
240	1	6,000	25	20,472	12	96.3	5.75	CCAS-12F860	NS	131.3
277	1	6,000	21.7	20,472	12	96.3	5.75	CCAS-12F860	NS	131.3
480	3	6,000	7.2	20,472	12	96.3	5.75	CCAS-12F860	NS	131.3

Stock Status: **S** = stock AS = assembly stock NS = non-stock
To Order—Specify model, watts, volts, phase and quantity.

Ordering Information

To Order — Complete the Model Number using the Matrix provided.

Model **Architectural Slope Top Convection Heater**

CCAS-12

Code Inlet

- **F** Front
- **B** Bottom

Code Length (Ft.)

- **2** 2
- **3** 3
- **4** 4
- **6** 6
- **8** 8

Code Wattage (see table)

Code Voltage/Phase

21	208/1	**33**	240/3
23	208/3	**41**	277/1
31	240/1	**73**	480/3

Code Finish

Painted		Anodized	
68	Almond	**07**	Bronze
02	White	**10**	Clear

Code Control Options (factory installed)

- **A9** Built-in DP tamperproof hydraulic thermostat 208 - 277V
- **A3** Built-in 3P tamperproof hydraulic thermostat for 3P voltages 208 - 480V
- **A4** Built-in 24V low voltage relay for 1P voltages 208 - 277V
- **A5** Built-in 24V low voltage relay and transformer for 1P voltages 208 - 277V
- **A6** Built-in 24V contactor for 3P voltages 208 - 480V
- **A7** Built-in 24V contactor and transformer for 3P voltages 208 - 480V
- **A8** Built-in disconnect switch, rated 277V @ 20A
- **B9** Built-in DP tamperproof thermostat and disconnect
- **B3** Built-in 3P tamperproof thermostat and disconnect

CCAS-12 B 2 15 21 68 A9 **Typical Model Number**

Accessories (Field Installed)

ALPKM2 — Pedestal kit for units up to 4 feet in length (2 pedestals included)

ALPKM3 — Pedestal kit for units above 4 feet in length (3 pedestals included)

ALS12IC90 — Inside 90 degree corner

ALS12OC90 — Outside 90 degree corner

Filler Sections — Contact your Local Chromalox Sales office for available sizes.

CAF-12

Architectural Convection Heater

- 1,125 - 6,000 Watts
- 3,839 - 20,472 Btuh
- 208, 240, 277 and 480 Volt
- 1 & 3 Phase
- 24.3 - 72.3" Lengths
- 562 or 750 W/Ft.

Dimensions (Inches)

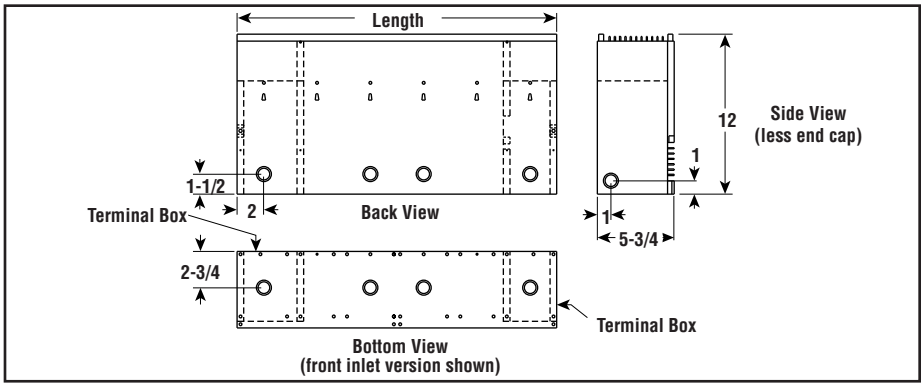

Applications

Provide ideal solutions to a wide variety of institutional, commercial and industrial space heating applications such as:

- Entryways
- Stairwells
- Corridors, Meeting Rooms
- Factory Offices
- Auditoriums
- Areas where Cabinet Strength and Contemporary Styling are Required

Construction

Standard Finishes — White or Almond painted finish is hybrid polyester epoxy powder coat. Clear and Bronze 40 are anodized aluminum finishes.

Front and Top Surface is constructed of 14 gauge extruded aluminum with punched air intake and exhaust vents. Cabinet back and bottom are fabricated from satin coat steel with multiple knockouts for convenient power connection. Endcaps are field removable for continuous heater installation.

Stainless Steel Sheath encloses a nickel chromium element compacted in a mineral insulation. Aluminum fins are positively staked to the surface and provide superior heat transfer.

Choice of Cold Air Intake, front or bottom.

Custom — Contact your Local Chromalox Sales office.

Features

Full Length Thermal Protection.

Floating Element Suspension Minimizes Expansion Noise.

Built-in Wireway for Continuous Installation.

Optional Built-in, Tamperproof Thermostat Controls may be mounted in either the left or right hand terminal box. Built-in low voltage relays or contactors, if specified, are located in the right hand terminal box. Power connection can be made at either end of the heater.

Advantages

- Easy Mounting and Wiring
- Advanced Architectural Styling

Specifications and Ordering Information

Electrical					Dimensions (In.)			Ordering		Wt. (Lbs.)
Volts	Phase	Watts	Amps	Btuh	Height	Length	Depth	Model	Stock	
208	1	1,125	5.4	3,838	12	24.3	5.75	CAF-12F211	NS	50.9
208	3	1,125	3.1	3,838	12	24.3	5.75	CAF-12F211	NS	50.9
240	1	1,125	4.7	3,838	12	24.3	5.75	CAF-12F211	NS	50.9
277	1	1,125	4.1	3,838	12	24.3	5.75	CAF-12F211	NS	50.9
208	1	1,500	7.2	5,118	12	24.3	5.75	CAF-12F215	NS	50.9
208	3	1,500	4.2	5,118	12	24.3	5.75	CAF-12F215	NS	50.9
240	1	1,500	6.3	5,118	12	24.3	5.75	CAF-12F215	NS	50.9
277	1	1,500	5.4	5,118	12	24.3	5.75	CAF-12F215	NS	50.9
480	3	1,500	1.8	5,118	12	24.3	5.75	CAF-12F215	NS	50.9
208	1	1,687	8.1	5,756	12	36.3	5.75	CAF-12F316	NS	64.3
208	3	1,687	4.7	5,756	12	36.3	5.75	CAF-12F316	NS	64.3
240	1	1,687	7	5,756	12	36.3	5.75	CAF-12F316	NS	64.3
277	1	1,687	6.1	5,756	12	36.3	5.75	CAF-12F316	NS	64.3
480	3	1,687	2	5,756	12	36.3	5.75	CAF-12F316	NS	64.3
208	1	2,250	10.8	7,677	12	48.3	5.75	CAF-12F422	NS	77.7
208	3	2,250	6.3	7,677	12	48.3	5.75	CAF-12F422	NS	77.7
240	1	2,250	9.3	7,677	12	48.3	5.75	CAF-12F422	NS	77.7
277	1	2,250	8.1	7,677	12	48.3	5.75	CAF-12F422	NS	77.7
480	3	2,250	2.7	7,677	12	48.3	5.75	CAF-12F422	NS	77.7
208	1	3,000	14.4	10,236	12	48.3	5.75	CAF-12F430	NS	77.7
208	3	3,000	8.3	10,236	12	48.3	5.75	CAF-12F430	NS	77.7
240	1	3,000	12.5	10,236	12	48.3	5.75	CAF-12F430	NS	77.7
277	1	3,000	10.8	10,236	12	48.3	5.75	CAF-12F430	NS	77.7
480	3	3,000	3.6	10,236	12	48.3	5.75	CAF-12F430	NS	77.7
208	1	3,375	16.2	11,515	12	72.3	5.75	CAF-12F633	NS	104.5
208	3	3,375	9.4	11,515	12	72.3	5.75	CAF-12F633	NS	104.5
240	1	3,375	14.1	11,515	12	72.3	5.75	CAF-12F633	NS	104.5
277	1	3,375	12.2	11,515	12	72.3	5.75	CAF-12F633	NS	104.5
480	3	3,375	4.1	11,515	12	72.3	5.75	CAF-12F633	NS	104.5

CAF-12

Architectural Convection Heater *(cont'd.)*

Specifications and Ordering Information

Electrical					Dimensions (In.)			Ordering		Wt. (Lbs.)
Volts	Phase	Watts	Amps	Btuh	Height	Length	Depth	Model	Stock	
208	1	4,500	21.6	15,354	12	72.3	5.75	CAF-12F645	NS	104.5
208	3	4,500	12.5	15,354	12	72.3	5.75	CAF-12F645	NS	104.5
240	1	4,500	18.8	15,354	12	72.3	5.75	CAF-12F645	NS	104.5
277	1	4,500	16.2	15,354	12	72.3	5.75	CAF-12F645	NS	104.5
480	3	4,500	5.4	15,354	12	72.3	5.75	CAF-12F645	NS	104.5
208	1	4,500	21.6	15,354	12	96.3	5.75	CAF-12F845	NS	131.3
208	3	4,500	12.5	15,354	12	96.3	5.75	CAF-12F845	NS	131.3
240	1	4,500	18.8	15,354	12	96.3	5.75	CAF-12F845	NS	131.3
277	1	4,500	16.2	15,354	12	96.3	5.75	CAF-12F845	NS	131.3
480	3	4,500	5.4	15,354	12	96.3	5.75	CAF-12F845	NS	131.3
208	1	6,000	28.8	20,472	12	96.3	5.75	CAF-12F860	NS	131.3
208	3	6,000	16.7	20,472	12	96.3	5.75	CAF-12F860	NS	131.3
240	1	6,000	25	20,472	12	96.3	5.75	CAF-12F860	NS	131.3
277	1	6,000	21.7	20,472	12	96.3	5.75	CAF-12F860	NS	131.3
480	3	6,000	7.2	20,472	12	96.3	5.75	CAF-12F860	NS	131.3

Stock Status: **S** = stock AS = assembly stock NS = non-stock
To Order—Specify model, watts, volts, phase and quantity.

Ordering Information

To Order — Complete the Model Number using the Matrix provided.

Model **Architectural Convection Heater**

CAF-12

Code Inlet

- **F** Front
- **B** Bottom

Code Length (Ft.)

- **2** 2
- **3** 3
- **4** 4
- **6** 6
- **8** 8

Code Wattage (see table)

Code Voltage/Phase

- **21** 208/1
- **23** 208/3
- **31** 240/1
- **41** 277/1
- **73** 480/3

Code Finish

Painted		Anodized	
68	Almond	**07**	Bronze
02	White	**10**	Clear

Code Control Options (factory installed)

- **A9** Built-in DP tamperproof hydraulic thermostat 208 - 277V
- **A3** Built-in 3P tamperproof hydraulic thermostat for 3P voltages 208 - 480V
- **A4** Built-in 24V low voltage relay for 1P voltages 208 - 277V
- **A5** Built-in 24V low voltage relay and transformer for 1P voltages 208 - 277V
- **A6** Built-in 24V contactor for 3P voltages 208 - 480V
- **A7** Built-in 24V contactor and transformer for 3P voltages 208 - 480V
- **A8** Built-in disconnect switch, rated 277V @ 20A
- **B9** Built-in DP tamperproof thermostat and disconnect
- **B3** Built-in 3P tamperproof thermostat and disconnect

CAF-12 B 2 15 21 68 A9 **Typical Model Number**

Accessories (Field Installed)

ALPKM2 — Pedestal kit for units up to 4 feet in length (2 pedestals included)

ALPKM3 — Pedestal kit for units above 4 feet in length (3 pedestals included)

ALF12IC90 — Inside 90 degree corner

ALF12OC90 — Outside 90 degree corner

Filler Sections — Contact your Local Chromalox Sales office for available sizes.

CAF-20

Architectural Cabinet Convection Heater

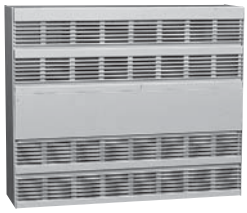

- 1,500 - 6,000 Watts
- 5,118 - 20,472 Btuh
- 208, 240, 277 and 480 Volt
- 1 & 3 Phase
- 24.3 - 72.3" Lengths
- 750 or 1,000 W/Ft.

Applications

Provide ideal solutions to a wide variety of institutional, commercial and industrial space heating applications such as:

- Entryways
- Stairwells
- Corridors
- Meeting Rooms
- Factory Offices
- Auditorium areas where Cabinet Strength and Contemporary Styling are required.

Construction

Standard Finishes — White or Almond painted finish is hybrid polyester epoxy powder coat. Clear and Bronze 40 are anodized aluminum finishes.

Front and Top Surface is constructed of 14 gauge extruded aluminum with punched air intake and exhaust vents. Cabinet back and bottom are fabricated from satin coat steel and with multiple knockouts for convenient power connection. Endcaps are field removable for continuous heater installation.

Front Air Intake, Front Air Exhaust.

May Be Partially or Fully Recessed.

Stainless Steel Sheath encloses a nickel chromium element compacted in a mineral insulation. Aluminum fins are positively staked to the surface and provide superior heat transfer.

Custom — Contact your Local Chromalox Sales office.

Dimensions (Inches)

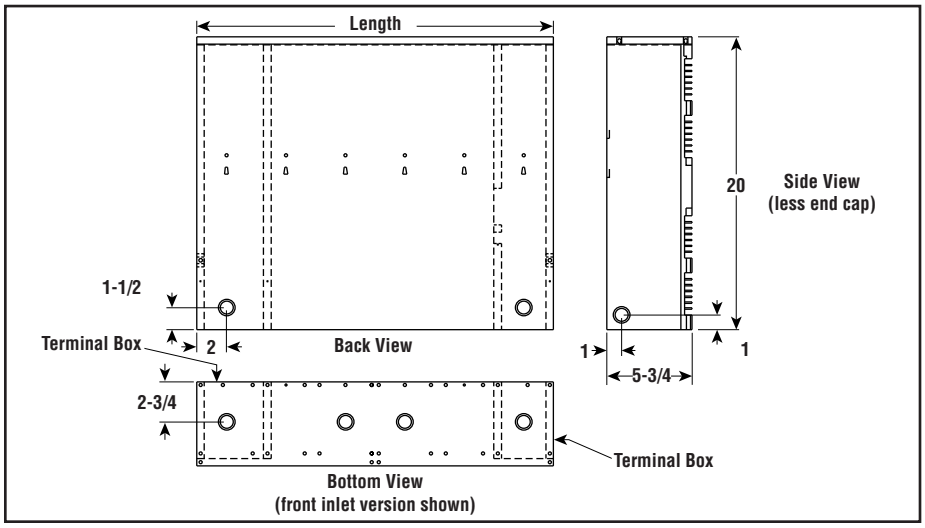

Features

Optional Built-in Tamperproof Thermostat Controls may be mounted in either the left or right hand terminal box. Built-in low voltage relays or contactors, if specified, are located in the right hand terminal box. Power connection can be made at either end of the heater.

Full Length Thermal Protection.

Floating Element Suspension Minimizes Expansion Noise.

Advantages

- Easy Mounting and Wiring
- Advanced Architectural Styling

Specifications and Ordering Information

Electrical					Dimensions (In.)			Ordering		Wt. (Lbs.)
Volts	Phase	Watts	Amps	Btuh	Height	Length	Depth	Model	Stock	
208	1	1,500	7.2	5,118	20	24.3	5.75	CAF-20215	NS	32
208	3	1,500	4.2	5,118	20	24.3	5.75	CAF-20215	NS	32
240	1	1,500	6.3	5,118	20	24.3	5.75	CAF-20215	NS	32
240	3	1,500	3.6	5,118	20	24.3	5.75	CAF-20215	NS	32
277	1	1,500	5.4	5,118	20	24.3	5.75	CAF-20215	NS	32
480	1	1,500	3.1	5,118	20	24.3	5.75	CAF-20215	NS	32
480	3	1,500	1.8	5,118	20	24.3	5.75	CAF-20215	NS	32
208	1	2,000	9.6	6,824	20	24.3	5.75	CAF-20220	NS	32
208	3	2,000	5.6	6,824	20	24.3	5.75	CAF-20220	NS	32
240	1	2,000	8.3	6,824	20	24.3	5.75	CAF-20220	NS	32
240	3	2,000	4.8	6,824	20	24.3	5.75	CAF-20220	NS	32
277	1	2,000	7.2	6,824	20	24.3	5.75	CAF-20220	NS	32
480	1	2,000	4.2	6,824	20	24.3	5.75	CAF-20220	NS	32
480	3	2,000	2.4	6,824	20	24.3	5.75	CAF-20220	NS	32
208	1	3,000	14.4	10,236	20	36.3	5.75	CAF-20330	NS	43.5
208	3	3,000	8.3	10,236	20	36.3	5.75	CAF-20330	NS	43.5
240	1	3,000	12.5	10,236	20	36.3	5.75	CAF-20330	NS	43.5
240	3	3,000	7.2	10,236	20	36.3	5.75	CAF-20330	NS	43.5
277	1	3,000	10.8	10,236	20	36.3	5.75	CAF-20330	NS	43.5
480	1	3,000	6.3	10,236	20	36.3	5.75	CAF-20330	NS	43.5
480	3	3,000	3.6	10,236	20	36.3	5.75	CAF-20330	NS	43.5
208	1	3,000	14.4	10,236	20	48.3	5.75	CAF-20430	NS	141.9
208	3	3,000	8.3	10,236	20	48.3	5.75	CAF-20430	NS	141.9
240	1	3,000	12.5	10,236	20	48.3	5.75	CAF-20430	NS	141.9
240	3	3,000	7.2	10,236	20	48.3	5.75	CAF-20430	NS	141.9
277	1	3,000	10.8	10,236	20	48.3	5.75	CAF-20430	NS	141.9
480	1	3,000	6.3	10,236	20	48.3	5.75	CAF-20430	NS	141.9
480	3	3,000	3.6	10,236	20	48.3	5.75	CAF-20430	NS	141.9

CAF-20

Architectural Cabinet Convection Heater *(cont'd.)*

Specifications and Ordering Information

Electrical					Dimensions (In.)			Ordering		Wt. (Lbs.)
Volts	Phase	Watts	Amps	Btuh	Height	Length	Depth	Model	Stock	
208	1	4,000	19.2	13,648	20	48.3	5.75	CAF-20440	NS	141.9
208	3	4,000	11.1	13,648	20	48.3	5.75	CAF-20440	NS	141.9
240	1	4,000	16.7	13,648	20	48.3	5.75	CAF-20440	NS	141.9
240	3	4,000	9.6	13,648	20	48.3	5.75	CAF-20440	NS	141.9
277	1	4,000	14.4	13,648	20	48.3	5.75	CAF-20440	NS	141.9
480	1	4,000	8.3	13,648	20	48.3	5.75	CAF-20440	NS	141.9
480	3	4,000	4.8	13,648	20	48.3	5.75	CAF-20440	NS	141.9
208	1	4,500	21.6	15,354	20	72.3	5.75	CAF-20645	NS	198.2
208	3	4,500	12.5	15,354	20	72.3	5.75	CAF-20645	NS	198.2
240	1	4,500	18.8	15,354	20	72.3	5.75	CAF-20645	NS	198.2
240	3	4,500	10.8	15,354	20	72.3	5.75	CAF-20645	NS	198.2
277	1	4,500	16.2	15,354	20	72.3	5.75	CAF-20645	NS	198.2
480	1	4,500	9.4	15,354	20	72.3	5.75	CAF-20645	NS	198.2
480	3	4,500	5.4	15,354	20	72.3	5.75	CAF-20645	NS	198.2
208	1	5,000	24	17,060	20	60.3	5.75	CAF-20550	NS	170.1
208	3	5,000	13.9	17,060	20	60.3	5.75	CAF-20550	NS	170.1
240	1	5,000	20.8	17,060	20	60.3	5.75	CAF-20550	NS	170.1
240	3	5,000	12	17,060	20	60.3	5.75	CAF-20550	NS	170.1
277	1	5,000	18.1	17,060	20	60.3	5.75	CAF-20550	NS	170.1
480	1	5,000	10.4	17,060	20	60.3	5.75	CAF-20550	NS	170.1
480	3	5,000	6	17,060	20	60.3	5.75	CAF-20550	NS	170.1
208	1	6,000	28.8	20,472	20	72.3	5.75	CAF-20660	NS	198.2
208	3	6,000	16.7	20,472	20	72.3	5.75	CAF-20660	NS	198.2
240	1	6,000	25	20,472	20	72.3	5.75	CAF-20660	NS	198.2
240	3	6,000	14.5	20,472	20	72.3	5.75	CAF-20660	NS	198.2
277	1	6,000	21.7	20,472	20	72.3	5.75	CAF-20660	NS	198.2
480	1	6,000	12.5	20,472	20	72.3	5.75	CAF-20660	NS	198.2
480	3	6,000	7.2	20,472	20	72.3	5.75	CAF-20660	NS	198.2

Stock Status: **S** = stock AS = assembly stock NS = non-stock
To Order—Specify model, watts, volts, phase and quantity.

Ordering Information

To Order — Complete the Model Number using the Matrix provided.

Model **Architectural Cabinet Convection Heater**

CAF-20

Code	Length (Ft.)
2	2
3	3
4	4
5	5
6	6

Code Wattage (see table)

Code	Voltage/Phase	Code	Voltage/Phase
21	208/1	**33**	240/3
23	208/3	**41**	277/1
31	240/1	**73**	480/3

Code Finish

Painted		Anodized	
68	Almond	**07**	Bronze
02	White	**10**	Clear

Code	Control Options (factory installed)
A9	Built-in DP tamperproof hydraulic thermostat 208 - 480V
A3	Built-in 3P tamperproof hydraulic thermostat for 3P voltages 208 - 480V
A4	Built-in 24V low voltage relay for 1P voltages 208 - 480V
A5	Built-in 24V low voltage relay and transformer for 1P voltages 208 - 480V
A6	Built-in 24V contactor for 3P voltages 208 - 480V
A7	Built-in 24V contactor and transformer for 3P voltages 208 - 480V
A8	Built-in 30 amp disconnect

CAF-20 2 20 21 68 A9 Typical Model Number

Accessories (Field Installed)

ALTB — Trim Bar. Consult your Local Chromalox Sales office for details.

ChromaStar™

Infra-Red Radiant Heaters

- **1.5 to 13.5 kW**
- **5,118 to 46,062 BTU/Hr**
- **120, 208, 240, 277, 480, and 600 Volts**
- **Single or 3 Phase - Most Models Field Convertible**
- **Fixed Overhead - Convertible to Portable**
- **Portable/Factory Assembled**
- **Optional Accessories**
  - Ground Fault
  - Disconnect
  - Tip Over Shut Down
- **UL Listed, CSA Registered (Fixed Overhead Models Only)**

Applications

- Localized heating in large plants
- Loading Docks
- Narrow warehouse aisle heating
- Garages
- Dry paint
- Prevent freezing of pipes, valves
- Heat hoppers

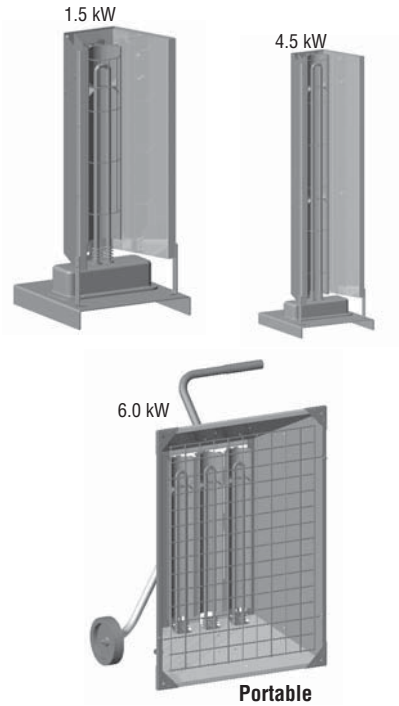

Portable

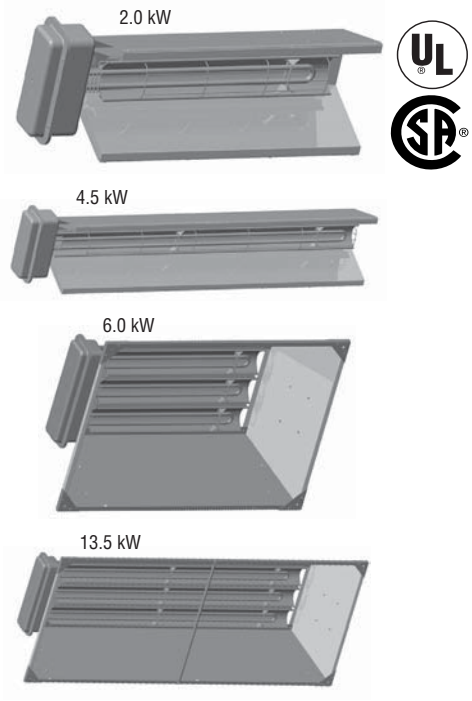

Fixed

Description

The Chromalox ChromaStar™ infra-red comfort heaters are designed to provide a rugged source of heat for use in areas where dependence on air movement is impractical. The heaters are versatile, designed to provide warmth directly where it is needed for primary or spot heating applications. Each unit is constructed for long life and requires minimal maintenance. There are no moving parts or motors to wear out, no air filters or lubrication required.

All Chromalox ChromaStar™ radiant heaters feature the exclusive "Arctic End" Patent Pending heating element terminal construction. This feature lowers the terminal box temperatures resulting in extended element and wiring life.

Extruded aluminum housings are rigid to provide added protection to the heating elements located at the focal point of a built-in mirrored aluminum reflector(s).

The heater(s) consist of hairpin bent .430" diameter alloy sheath tubular element(s) constructed of high quality resistance wire embedded in carefully selected MgO refractory insulation. The element feature "Arctic end" terminal construction for longer life and cooler terminal enclosure temperatures. The element(s) also feature terminal construction using a waged-in silicone bushings that produce unequalled resistance to moisture absorption. The heating element(s) connect to a gasketed, moisture resistance terminal enclosure with liquid-tight bulkhead threaded fittings. An extension reflector constructed of 0.050" mirrored aluminum extends over the assembly to provide a more uniform heating pattern.

Portable

All portable heaters are supplied fully assembled to a rugged, chrome-nickel plated tubular steel cart and handle (1.5 and 2.0 kW heater has a fixed pedestal). The cart features large wheels for easy portability. All portable heaters include safety grills to protect personnel from contacting hot elements.

Field wiring is accomplished through a 3/4" conduit opening in terminal enclosure. The 1.5 kW u nit comes complete with a factory installed 6 foot cord and 2 prong grounding type plug. Other models can be field wired using accessory cable and plug kits shown.

Fixed Overhead

The Chromalox ChromaStar™ radiant heater is shipped fully assembled and can be hung from thee ceiling with 2 chains or rigid angle brackets attached to the heater brackets located on the back of the heater.

Field wiring is accomplished through the liquid tight terminal enclosure. No secondary splice box required.

Protective screens, disconnect switches and portable carts are available for these heaters as shown.

ChromaStar™

Infra-Red Radiant Heaters *(cont'd.)*

Portable Radiant Heaters 1.5 to 4.5 kW Dimensions

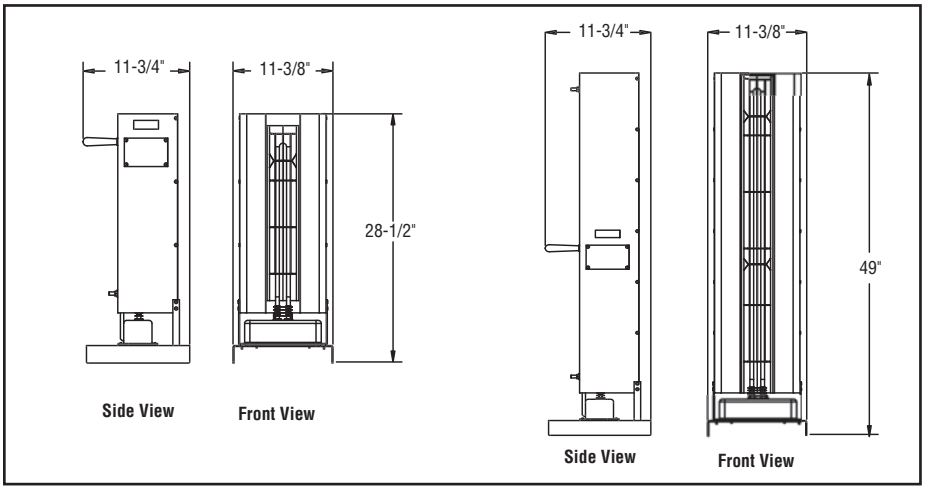

Specifications and Ordering Information

Electrical						Dimensions (in.)			Ordering			
kW	Volts	Phase	No. Elem.	Amps	Btuh	Height	Base Width	Base Depth	Model	Stock	PCN	Wt. (Lbs.)
1.5	120	1	1	12.5	5,118	28-1/2	11-3/8	11-3/4	**STAR-02A-11-PC***	**S**	**340486**	15
2	208	1	1	9.6	6,824	28-1/2	11-3/8	11-3/4	STAR-02A-81-P	AS	340494	15
2	240	1	1	8.3	6,824	28-1/2	11-3/8	11-3/4	STAR-02A-21-P	AS	340507	15
2	277	1	1	7.2	6,824	28-1/2	11-3/8	11-3/4	STAR-02A-71-P	AS	340515	15
2	480	1	1	4.2	6,824	28-1/2	11-3/8	11-3/4	**STAR-02A-41-P**	**S**	**340523**	15
2	600	1	1	3.2	6,824	28-1/2	11-3/8	11-3/4	STAR-02A-61-P	AS	340531	15
4.5	208	1	1	21.6	15,354	49	11-3/8	11-3/4	STAR-05A-81-P	AS	340380	25
4.5	240	1	1	18.8	15,354	49	11-3/8	11-3/4	STAR-05A-21-P	AS	340398	25
4.5	277	1	1	16.2	15,354	49	11-3/8	11-3/4	STAR-05A-71-P	AS	340400	25
4.5	480	1	1	9.4	15,354	49	11-3/8	11-3/4	**STAR-05A-41-P**	**S**	**340419**	25
4.5	600	1	1	7.5	15, 354	49	11-3/8	11-3/4	STAR-05A-61-P	AS	340427	25

Stock Status: S = stock AS = assembly stock NS = non-stock *Incl 6 foot cord and 2-prong grounding type plug.
To Order — Specify model, PCN, kW, volts, phase and quantity.

Portable Radiant Heaters 6 to 13.5 kW Dimensions

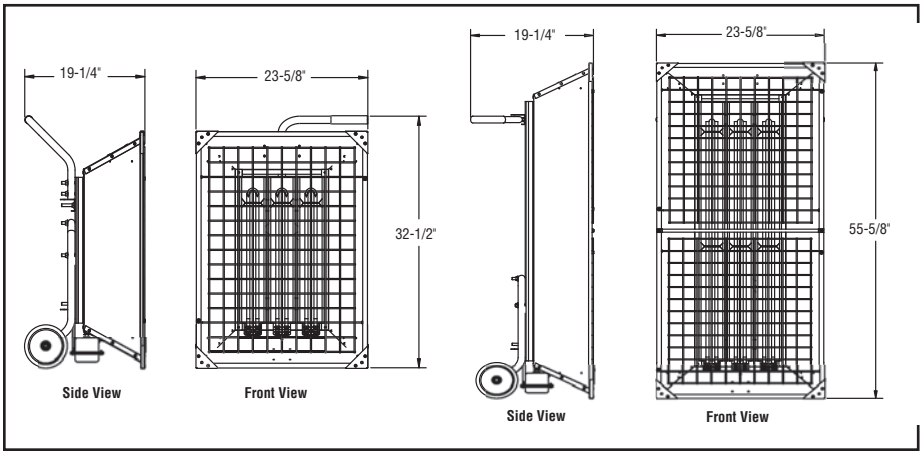

Specifications and Ordering Information

Electrical					Dimensions (in.)			Ordering			
kW	Volts	Phase	Amps	Btuh	Height	Base Width	Base Depth	Model	Stock	PCN	Wt. (Lbs.)
6	208	3	16.7	20,472	32-1/2	23-5/8	11-1/2	**STAR-06A-83-P**	**S**	**341163**	26
6	240	3	14.4	20,472	32-1/2	23-5/8	11-1/2	**STAR-06A-23-P**	**S**	**341171**	26
6	277	1	21.7	20,472	32-1/2	23-5/8	11-1/2	STAR-06A-71-P	AS	341180	26
6	480	3	7.2	20,472	32-1/2	23-5/8	11-1/2	**STAR-06A-43-P**	**S**	**341198**	26
6	600	3	5.8	20,472	32-1/2	23-5/8	11-1/2	STAR-06A-63-P	AS	341200	26
13.5	208	3	37.5	46,062	55-5/8	23-5/8	11-1/2	**STAR-14A-83-P**	**S**	**341219**	44
13.5	240	3	32.5	46,062	55-5/8	23-5/8	11-1/2	**STAR-14A-23-P**	**S**	**341227**	44
13.2	277	1	47.7	46,062	55-5/8	23-5/8	11-1/2	**STAR-14A-71-P**	**S**	**341235**	44
13.5	480	3	16.3	46,062	55-5/8	23-5/8	11-1/2	**STAR-14A-43-P**	**S**	**341243**	44
13.5	600	3	3	46,062	55-5/8	23-5/8	11-1/2	**STAR-14A-63-P**	**S**	**341251**	44

Stock Status: S = stock AS = assembly stock NS = non-stock *Includes 6 foot cord and 2-prong grounding type plug.
To Order — Specify model, PCN, kW, volts, phase and quantity. Assembly Stock shipped in one week. For Stock shipment, order fixed overhead heaters on following page and appropriate cart kit on page 80.

ChromaStar™

Infra-Red Radiant Heaters *(cont'd.)*

Fixed Overhead Radiant Heaters 2.0 to 4.5 kW Dimensions

U.L Listed & CSA Certified for Fixed Installations

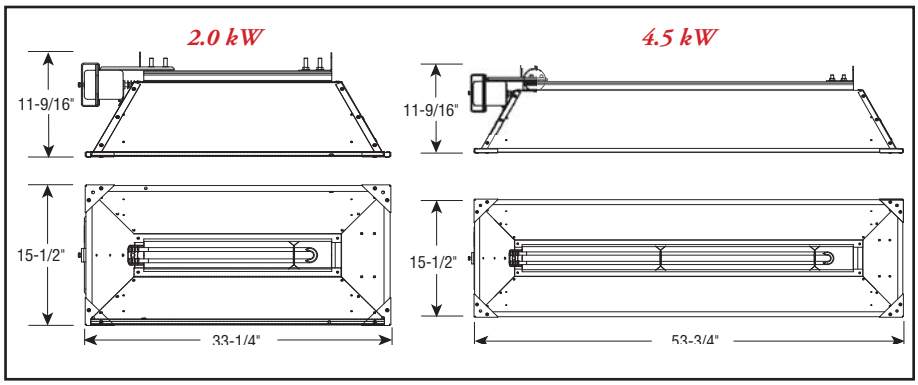

Specifications and Ordering Information

Electrical					Dimensions (in.)			Ordering			
kW	Volts	Phase	Amps	Btuh	Height	Base Width	Base Depth	Model	Stock	PCN	Wt. (Lbs.)
2	208	1	9.6	6,824	27-11/16	9-7/8	6-13/16	**STAR-02A-81-F**	**S**	**340558**	14
2	240	1	8.3	6,824	27-11/16	9-7/8	6-13/16	**STAR-02A-21-F**	**S**	**340566**	14
2	277	1	7.2	6,824	27-11/16	9-7/8	6-13/16	STAR-02A-71-F	AS	340574	14
2	480	1	4.2	6,824	27-11/16	9-7/8	6-13/16	**STAR-02A-41-F**	**S**	**340582**	14
2	600	1	3.3	6,824	27-11/16	9-7/8	6-13/16	**STAR-02A-61-F**	**AS**	**340590**	14
4.5	208	1	21.6	15,354	48-3/16	9-7/8	6-13/16	STAR-05A-81-F	AS	340435	23
4.5	240	1	18.8	15,354	48-3/16	9-7/8	6-13/16	STAR-05A-21-F	AS	340443	23
4.2	277	1	16.2	15,354	48-3/16	9-7/8	6-13/16	STAR-05A-71-F	AS	340451	23
4.5	480	1	9.4	15,354	48-3/16	9-7/8	6-13/16	**STAR-05A-41-F**	**S**	**340460**	23
4.5	600	1	7.5	15,354	48-3/16	9-7/8	6-13/16	STAR-05A-61-F	AS	340478	23

Stock Status: S = stock AS = assembly stock NS = non-stock
To Order — Specify model, PCN, kW, volts, phase and quantity.

Fixed Overhead Radiant Heaters 6.0 to 13.5 kW Dimensions

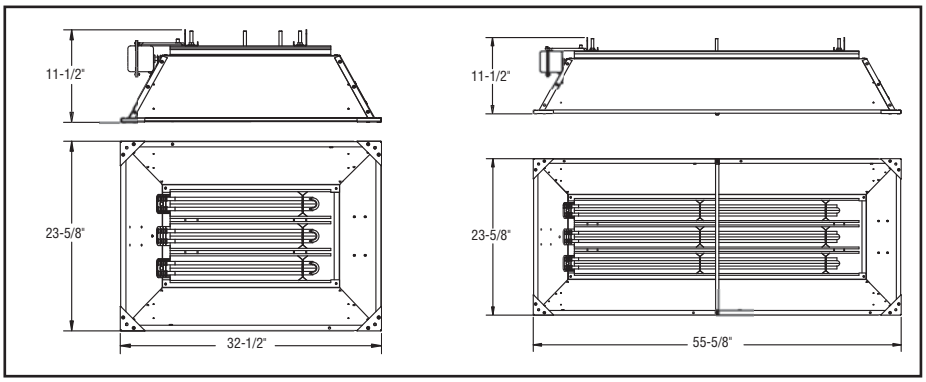

Specifications and Ordering Information

Electrical					Dimensions (in.)			Ordering			
kW	Volts	Phase	Amps	Btuh	Height	Base Width	Base Depth	Model	Stock	PCN	Wt. (Lbs.)
6	208	3	16.7	20,472	32-1/2	23-5/8	11-1/2	**STAR-06A-83-F**	**S**	**340339**	26
6	240	3	14.4	20,472	32-1/2	23-5/8	11-1/2	**STAR-06A-23-F**	**S**	**340347**	26
6	277	1	21.7	20,472	32-1/2	23-5/8	11-1/2	STAR-06A-71-F	NS	340355	26
6	480	3	7.2	20,472	32-1/2	23-5/8	11-1/2	**STAR-06A-43-F**	**S**	**340363**	26
6	600	3	5.8	20,472	32-1/2	23-5/8	11-1/2	STAR-06A-63-F	NS	340371	26
13.5	208	3	37.5	46,062	55-5/8	23-5/8	11-1/2	**STAR-14A-83-F**	**S**	**340232**	44
13.5	240	3	32.5	46,062	55-5/8	23-5/8	11-1/2	**STAR-14A-23-F**	**S**	**340240**	44
13.5	277	1	48.7	46,062	55-5/8	23-5/8	11-1/2	STAR-14A-71-F	NS	340259	44
13.5	480	3	16.3	46,062	55-5/8	23-5/8	11-1/2	**STAR-14A-43-F**	**S**	**340267**	44
13.5	600	3	13	46,062	55-5/8	23-5/8	11-1/2	STAR-14A-63-F	NS	340275	44

Stock Status: S = stock AS = assembly stock NS = non-stock
To Order — Specify model, PCN, kW, volts, phase and quantity.

ChromaStar™
Infra-Red Radiant Heaters *(cont'd.)*

Accessories
For use with both Fixed Overhead and Portable Heaters

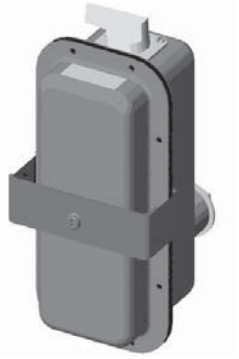

Disconnect Kits
The disconnect kit consists of a complete liquid tight assembly including a 3 pole 48 Amp switch, power terminal block and all hardware to mount either the fixed overhead or portable radiant heater.

Specifications and Ordering Information

Model No.	kW	Status	PCN	Wt. (Lbs.)
DS-50600	All	**S**	**340662**	3

Portable Kits

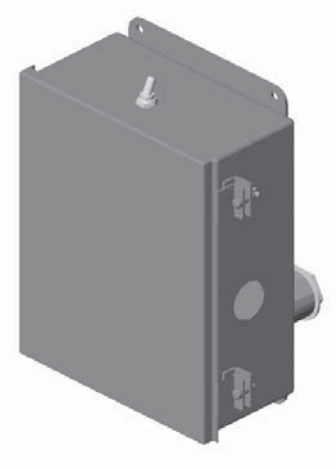

Tip Over Switch Kits
Chromalox STARTIP tip-over switch kits can be easily added to all Chromalox STAR 06 or 14 series factory assembled portable heaters or fixed overhead heaters which have been modified by use of a portable STAR-CART kit. This kit is designed to de-energize the heating elements of unattended units in event the heater is accidentally knocked over. The kit includes a control circuit transformer, magnetic contactor, tip-over switch assembly and on-off toggle switch with rubber boot, completely prewired in a NEMA 4 enclosure. The kit also includes a 1" coupling, wiring between the contactor and heater, mounting bracket, hardware and instructions to complete the installation to the heater.

Specifications and Ordering Information

Model No.	kW	Status	PCN	Wt. (Lbs.)
STARTP-8	208	AS	340670	14
STARTP-2	240	**S**	**340689**	14
STARTP-7	277	NS	340697	14
STARTP-4	480	**S**	**340700**	14
STARTP-6	600	NS	340718	14

Tip-Over Switch and Ground Fault Detector Kits
(for Portable STAR-06 and STAR-14 Heaters)

The Chromalox STAR-TG series kits include the components and features of the STARTIP tip-over kits with the additional protection provides by a ground fault detector. The ground fault detector will monitor for any gradual changes in the insulation level due to humidity or mechanical damage as they develop and will de-energize the contactor to prevent arcing type faults, preventing premature element failure and potential fire damage.

Specifications and Ordering Information

Model No.	kW	Status	PCN	Wt. (Lbs.)
STAR-TG-8	208	AS	340726	16
STAR-TG-2	240	**S**	**340734**	16
STAR-TG-7	277	NS	340742	16
STAR-TG-4	480	**S**	**340750**	16
STAR-TG-6	600	NS	340769	16

ChromaStar™ Accessories *(cont'd.)*

Plug Kits for Portable Heaters

Plug Type	Model Number	Description	Volts	Amps	Config.	NEMA#	ANSI#	Fits Cable Dia.	Stock	PCN	Wt. (Lbs.)
Locking	PGL-15-20	3 Pole 4 Wire	250	20		L15-20	C73.85	.385"-.780	**S**	**338845**	0.5
Locking	PGL-15-30	3 Pole 4 Wire	250	30		L15-30	C73.86	.385"-.780	**S**	**338853**	0.5
Locking	PGL-16-30	3 Pole 4 Wire	480	30		L16-30	C73.88	.595"- 1.150	**S**	**338861**	0.5
Locking	PGL-17-30	3 Pole 4 Wire	600	30		L17-30	C73.89	.595"- 1.150	**S**	**338870**	0.5
Locking	PGL-3763C	2 Pole 3 Wire	600	50		-	-	.750"-1.125	**S**	**338917**	0.5
Locking	PGL-3765C	3 Pole 4 Wire	600	50		-	-	.750"-1.125	**S**	**338925**	0.5
Non Locking	PGN-6-50	2 Pole 3 Wire	250	50		6-50	C73.53	.625"-1.187	**S**	**338888**	0.5
Non Locking	PGN-15-20	3 Pole 4 Wire	250	20		15-20	C73.59	.390"-.775	**S**	**338896**	0.5
Non Locking	PGN-15-50	3 Pole 4 Wire	250	50		15-50	C73.61	.750"-1.250	**S**	**338909**	0.5

Cable Kits for ChromaStar™ Series Portable Radiant Heaters

Cable packages include 25 feet Type SO cable, with either 3-conductors or 4-conductors, depending on the heater requirements. Each cable assembly includes the proper cord (connector). Plugs are not included. All models are factory wired for 3-phase, but can be field wired for single phase, select plug and cord accordingly.

	Cable Specifications			Cord Connector			
Model No.	Size/Type	Max. Amp	Temperature Ratings	NPT	Stock	PCN	Wt. (Lbs.)
PLC-2514-4	14/4SO	15	90 Deg. C	3/4"	**S**	**295427**	7
PLC-2514-3	14/3SO	18	90 Deg. C	3/4"	**S**	**295670**	23
PLC-2512-4	12/4SO	20	90 Deg. C	1"	**S**	**295435**	9
PLC-2512-3	12/3SO	25	90 Deg. C	3/4"	**S**	**295662**	6
PLC-2510-3	10/3SO	30	90 Deg. C	1"	**S**	**295443**	9
PLC-2508-3	8/4SO	35	90 Deg. C	1"	**S**	**295460**	15
PLC-2506-4	6/4SO	45	90 Deg. C	1"	**S**	**295494**	17
PLC-2506-3	6/3SO	55	90 Deg. C	1"	**S**	**295486**	16

SO = hard Service Cord, 600V Length = 25 Feet

Replacement Elements

Model No.	kW	Volts	Win2	Dimensions - inches A	Dimensions - inches B	Status	PCN	Wt. Lbs.
UTU-STAR 21	1.5	120	32	21-1/2	20-1/2	AS	106059	2
UTU-STAR 28	2	208	42	21-1/2	20-1/2	AS	106067	3
UTU-STAR 22	2	240	42	21-1/2	20-1/2	AS	106075	3
UTU-STAR 27	2	277	42	21-1/2	20-1/2	AS	106083	3
UTU-STAR 24	2	480	42	21-1/2	20-1/2	AS	106091	3
UTU-STAR 26	2	600	42	21-1/2	20-1/2	AS	106104	3
UTU-STAR 48	4.5	208	42	43-3/8	42-3/8	AS	106403	4
UTU-STAR 42	4.5	240	42	43-3/8	42-3/8	AS	106411	4
UTU-STAR 47	4.5	277	42	43-3/8	42-3/8	AS	106796	4
UTU-STAR 44	4.5	480	42	43-3/8	42-3/8	AS	106964	4
UTU-STAR 46	4.5	600	42	43-3/8	42-3/8	AS	106972	4

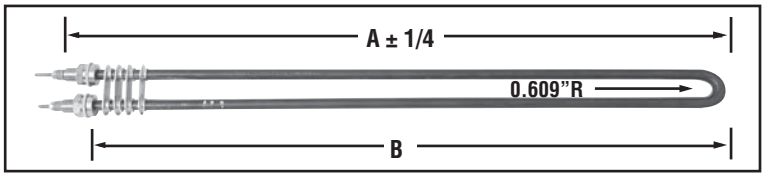

UTU-STAR

ChromaStar™ Accessories *(cont'd.)*

Accessories for Fixed Overhead Heaters

Hanger Kit

Hanger kits include 24 feet of chain, 4 "S" hooks to mount units in a fixed overhead position using the universal mounting brackets included on the back of fixed overhead radiant models. The chain is long enough to allow all heaters to be mounted up to 6 feet from the ceiling.

Specifications and Ordering Information

Model No.	kW	Status	PCN	Wt. (Lbs.)
STAR-HK	All	**S**	**340654**	2

Portable Cart Kits

Chromalox series ChromaStar™ fixed overhead radiant heaters can be field converted to portable spot heaters with the use of the cart kits. Each kit includes wheels, legs, handle, grill(s), baffle (if required) and all of the necessary hardware to complete the modification. These kits are easy to install with standard tools.

Specifications and Ordering Information

Model No.	kW	Status	PCN	Wt. (Lbs.)
STAR-06A CART	6	**S**	**340830**	8
STAR-14A CART	13.5	**S**	**340849**	8

Floor Protection Baffle Kit

The Chromalox safety baffle kit includes a refletor baffle which can be field installed on the lower reflective panel on portable STAR radiant heaters. The baffle will protect temperature sensitive flooring materials such as vinyl tile from being damaged due to radiant heat.

Specifications and Ordering Information

Model No.	kW	Status	PCN	Wt. (Lbs.)
FP-614	6 or 13.5	**S**	**340865**	2

Safety Grill Kits

The safety grill kits contain one (2kW, 4.5kW and 6kW) or two grills (13.5kw) to protect personnel from coming in contact with hot heating elements. The grills are constructed of heavy gauge plated steel and are simple to install.

Specifications and Ordering Information

Model No.	kW	Status	PCN	Wt. (Lbs.)
GR-2	2	**S**	**111878**	5
GR-4	4.5	**S**	**111894**	5
GR-6KW	6	**S**	**340638**	6
GR-14AKW	13.5	**S**	**340857**	12

Ground Fault Detection

The Chromalox STAR-GF series wall mounted ground fault detectors are designed to monitor for any gradual changes in the insulation level due to humidity or mechanical damage as they develop and will de-energize the load to prevent arcing type faults, preventing premature element failure and potential fire damage. The detector consists of a ground fault sensor, control circuit transformer, magnetic contactor and an on off toggle switch with rubber boot, completely prewired ina NEMA 4 enclosure.

Specifications and Ordering Information

Model No.	Heater Volts	Status	PCN	Wt. Lbs.
STAR-GF-8	208	AS	340777	16
STAR-GF-2	240	**S**	**340785**	16
STAR-GF-7	277	NS	340793	16
STAR-GF-4	480	**S**	**340806**	16
STAR-GF-6	600	NS	340814	16

RBC-1

Overhead Radiant Space Heater

- **1 - 2.5 kW**
- **3,412 - 8,530 Btuh**
- **120, 208, 240, 277 and 347 Volt Single Phase**
- **Heater Can be Washed Down After Being Disconnected**
- **Optional Screen Available**

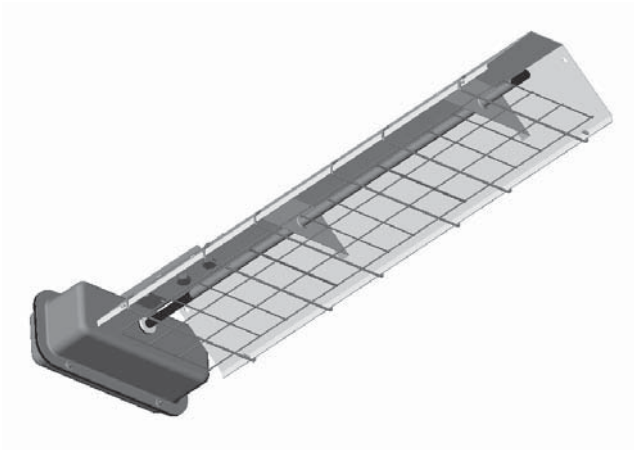

Description

RBC-1 Infrared radiant heaters are ideal for providing supplemental heat in damp locations or under-heated areas. The heaters can be suspended just like flourescent lighting fixtures to focus heat where desired. The heater assembly can be hosed down to remove dust and dirt accumulation found in heavy industrial locations.

Applications

- Garages
- Laundry Areas
- Work Shops
- Factories
- Assembly Areas
- Maintenance Areas

Construction

Reflector — 0.050" polished aluminum for high radiant efficiency .

Heating Elements — Single ended 0.475" diameter alloy sheathed tubular heater with liquid-tight brass threaded fittings connected to the gasketed enclosure.

Field Wiring — Includes moisture resistant terminal enclosure allowing the unit to be hosed down.

Mounting — 4 mounting holes to accept S-hooks supplied with STAR-HK hanger kit.

CAUTION — Hazard of Fire. Minimum spacing from front of heater case to combustible material is 4 ft. Do not operate any radiant heater where flammable vapors, gases or liquids are present.

Advantages

- Minimum Maintenance
- Easy Installation
- No Toxic Byproducts of Combustion
- No Fuel Lines to Break
- Safer, No Open Flames

Refer to WR-80, WR-90, VCF, VCS, VCR, HCP in the Controls section.

RBC-1

Overhead Radiant Space Heater *(cont'd.)*

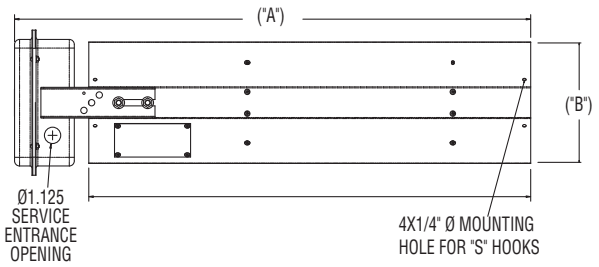

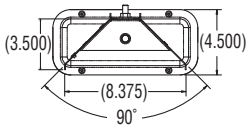

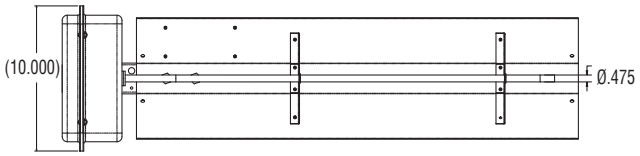

Specification and Ordering Information

Model	Volts	kW	Amperage	BTU	Dimensions A Length	Dimensions B Width	Dimensions D Depth	Stock Status	PCN	Wt. (Lbs.)
RBC-1101	120	1000	8.3	3412	27.125" (689 mm)	8.375" (212 mm)	3.5" (88.9)	**S**	**345826**	18
RBC-1108	208	1000	4.8	3412				**S**	**345834**	
RBC-1102	240	1000	4.2	3412				**S**	**345842**	
RBC-1107	277	1000	3.6	3412				NS	345850	
RBC-11034	347	1000	2.9	3412				NS	345869	
RBC-1151	120	1500	12.5	5118	35.625" (905 mm)	8.375" (212 mm)	3.5" (88.9)	**S**	**345877**	22
RBC-1158	208	1500	7.2	5118				**S**	**345885**	
RBC-1152	240	1500	6.3	5118				**S**	**345893**	
RBC-1157	277	1500	5.4	5118				NS	345906	
RBC-11534	347	1500	4.3	5118				NS	345914	
RBC-1208	208	2000	9.6	6824	46.625" (1184 mm)	8.375" (212 mm)	3.5" (88.9)	**S**	**345922**	24
RBC-1202	240	2000	8.3	6824				**S**	**345930**	
RBC-1207	277	2000	7.2	6824				NS	345949	
RBC-12034	347	2000	5.8	6824				NS	345957	
RBC-1258	208	2500	12.0	8530	53.375" (1356 mm)	8.375" (212 mm)	3.5" (88.9)	**S**	**345965**	26
RBC-1252	240	2500	10.4	8530				**S**	**345973**	
RBC-1257	277	2500	9.0	8530				NS	345981	
RBC-12534	347	2500	7.2	8530				NS	345990	

Stock Status: **S** = stock AS = assembly stock NS = non-stock
To Order—Specify model, PCN, kW, volts and quantity.

RBC-1 Optional Accessories

Model	Description	Wt (Lbs.)	Stock Status	PCN
STAR-HK	Hanger Kit	2	**S**	**340654**
G-110	Grill 1 kW	1	**S**	**341120**
G-115	Grill 1.5 kW	1	**S**	**341139**
G-120	Grill 2 kW	1	**S**	**341147**
G-125	Grill 2.5 kW	1	**S**	**341155**

Stock Status: **S** = stock AS = assembly stock NS = non-stock
To Order—Specify model, PCN, kW, volts and quantity.

RBC-3

Fixed Overhead Radiant Space Heater

- **1.2 - 3.6 kW**
- **4,094 - 12,283 Btuh**
- **208, 240 and 480 Volt**
- **1 or 3 Phase**
- **Moisture Resistant**

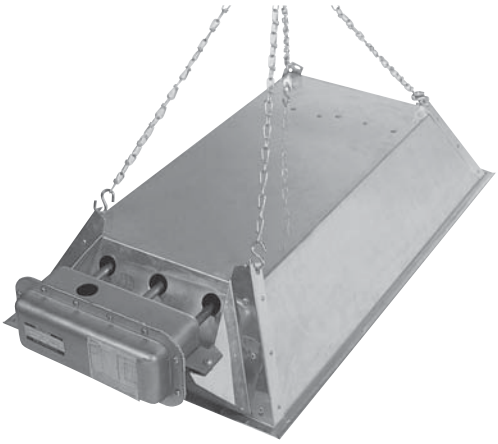

Description

RBC-3 Infrared radiant heaters are ideal for providing supplemental heat in damp locations or under-heated areas. The heater assembly can be hosed down to remove dust and dirt accumulations found in many heavy industrial locations.

Applications

- Garages
- Machine Shops
- Store Rooms
- Warehouses
- Factories
- Work Stations
- Parts Counters
- Maintenance Areas
- Shipping and Receiving Areas, Loading Docks

Dimensions (Inches)

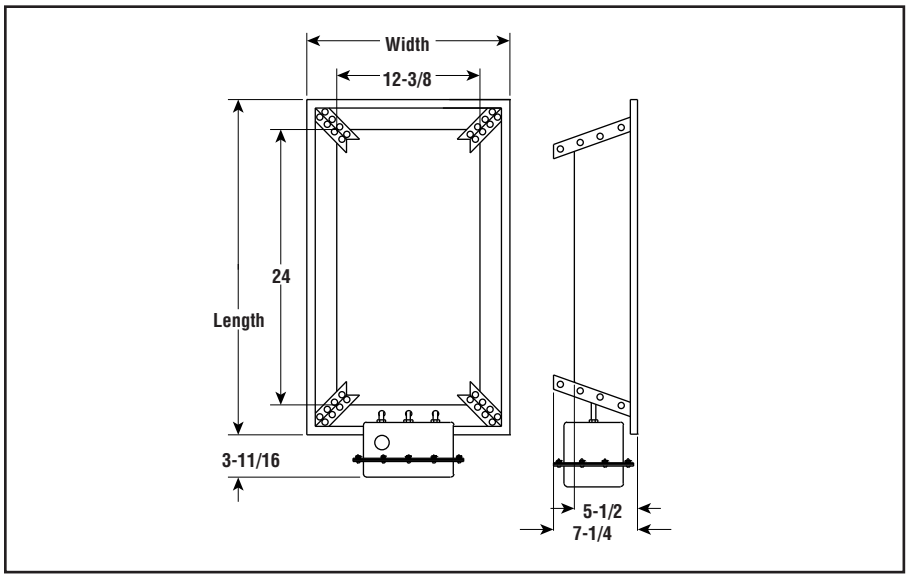

Construction

Housing — 0.050" polished aluminum for high efficiency radiant reflectivity, re-enforced at the corners for added strength.

Heating Elements — One, two or three single ended 0.475" diameter alloy sheathed tubular heaters with liquid-tight brass threaded fittings connected to the terminal enclosure.

Field Wiring — Includes a gasketed, moisture resistant terminal enclosure allowing the heater to be hosed down to remove dust and dirt.

Mounting — No. 2 size chain and S hooks supplied for suspension.

CAUTION — Hazard of Fire. Minimum spacing from front of heater case to combustible material is 4 ft. Do not operate any radiant heater where flammable vapors, gases or liquids are present.

Advantages

- Minimum Maintenance
- Easy Installation
- No Toxic Byproducts of Combustion
- No Fuel Lines to Break
- Safer, No Open Flames

Refer to WR-80, WR-90, VCF, VCS, VCR, HCP in the Controls section.

RBC-3

Fixed Overhead Radiant Space Heater *(cont'd.)*

Specifications and Ordering Information

Electrical					Dimensions (In.)			Ordering			
kW	Volts	Phase	No. Elem.	Btuh	Height	Width	Length	Model	Stock	PCN	Wt. (Lbs.)
1.2	208	1	1[1]	4,094	5-1/2	17-9/16	32-3/4	RBC-31280	AS	115043	30
1.2	240	1	1[1]	4,094	5-1/2	17-9/16	32-3/4	**RBC-31220**	**S**	**115051**	30
1.2	480	1	1[1]	4,094	5-1/2	17-9/16	32-3/4	RBC-31240	AS	115060	30
2.4	208	2	2[2]	8,188	5-1/2	17-9/16	32-3/4	RBC-32480	AS	115078	30
2.4	240	2	2[2]	8,188	5-1/2	17-9/16	32-3/4	RBC-32420	AS	115086	30
2.4	480	2	2[2]	8,188	5-1/2	17-9/16	32-3/4	**RBC-32440**	**S**	**115094**	30
3.6	208	3	3[2]	12,283	5-1/2	17-9/16	32-3/4	RBC-33680	AS	115107	30
3.6	240	3	3[2]	12,283	5-1/2	17-9/16	32-3/4	RBC-33620	AS	115115	30
3.6	480	3	3[2]	12,283	5-1/2	17-9/16	32-3/4	**RBC-33640**	**S**	**115123**	30

Stock Status: **S** = stock AS = assembly stock NS = non-stock
To Order—Specify model, PCN, kW, volts, phase and quantity.

1. For supply connections use 75°C wire minimum.
2. For supply connections use 90°C wire minimum.

Replacement Elements — Dimensions (Inches)

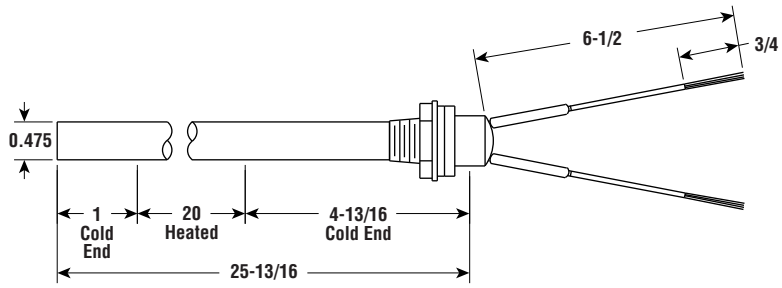

RBC-3 Replacement Elements — Specifications and Ordering Information

kW	Volts	W/In²	Part No.	Stock	PCN	Wt. (Lbs.)
1.2	208	40	322-874016-003	AS	114796	2
1.2	240	40	322-874016-001	AS	114761	2
1.2	480	40	322-874016-002	AS	114753	2

Stock Status: **S** = stock AS = assembly stock NS = non-stock
To Order—Specify Part Number, PCN, volts, kW and quantity.

Note — These elements are not to be used for direct immersion in liquids.

UTUA-LT

430" Dia. Round Cross-Section

- **INCOLOY Sheath**
- **2000 and 4500 Watts 240 and 480 Volt**
- **9/16 - 18 Bulkhead Fittings**
- **Replacement Element for Aitken* OH, SH, PPH and PHX Radiant Heaters**

Replacement Elements - Dimensions (Inches)

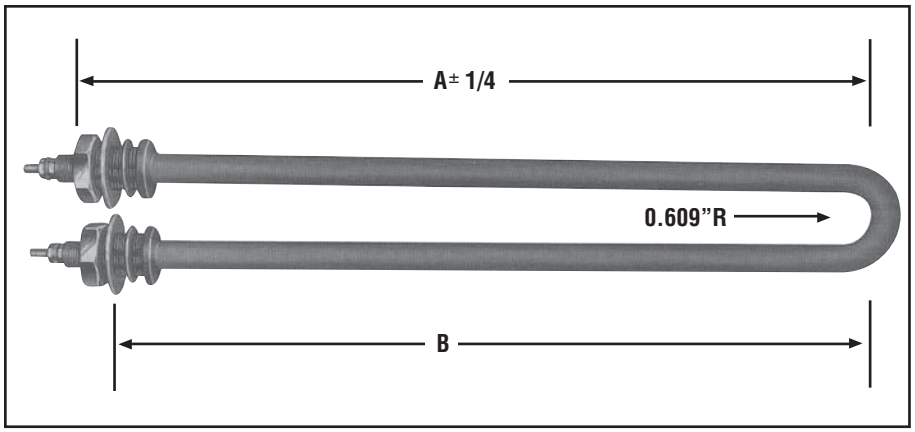

Applications

Replaces heating elements in radiant comfort heaters manufactured by Aitken Products, Inc. It can also be used in other heating applications where threaded liquid-tight fittings permit mounting for high-velocity air or immersion heating of liquids which are not corrosive to INCOLOY. When used for immersion heating, heated section of element must be immersed at all times.

Advantages

Specially constructed to provide excellent service life in radiant heating applications.

Features

Liquid-Tight Fittings - 9/16-18 Brass for mounting. Nuts, washers and gaskets included.

10-32 Terminals - Stainless steel, complete with nuts and washers.

Work Temperatures - See Tubular Heater overview section for element rated 40 W/In^2

Bending - Lengthwise only. See Tubular Heater Overview Section.

Specifications and Ordering Information

40 W/In^2 Watts	Volts	Dimensions (In) A	Dimensions (In) B	Model	Aitken* Part No.	Stock	PCN	Wt. (Lbs)
2000	240	21.5	20.5	**UTUA-224LT**	HE20240	**S**	**106016**	2
2000	480	21.5	20.5	**UTUA-248LT**	HE20480	**S**	**106024**	2
4500	240	43	42	**UTUA-424LT**	HE45240	**S**	**106032**	3
4500	480	43	42	**UTUA-448LT**	HE45480	**S**	**106040**	3

Stock Status: **S** = stock AS = assembly stock NS = non-stock
To Order—Specify model, watts, volts, phase and quantity.
*Aitken is a registered trademark of Aitken Products, Inc.

SKR

Single Fixed Element Radiant Heater

- **0.8 - 3.6 kW**
- **2,730 - 12,283 Btuh**
- **120, 208, 240, 275 and 480 Volt**
- **Single Phase**
- **Protective Grille**

Dimensions (Inches)

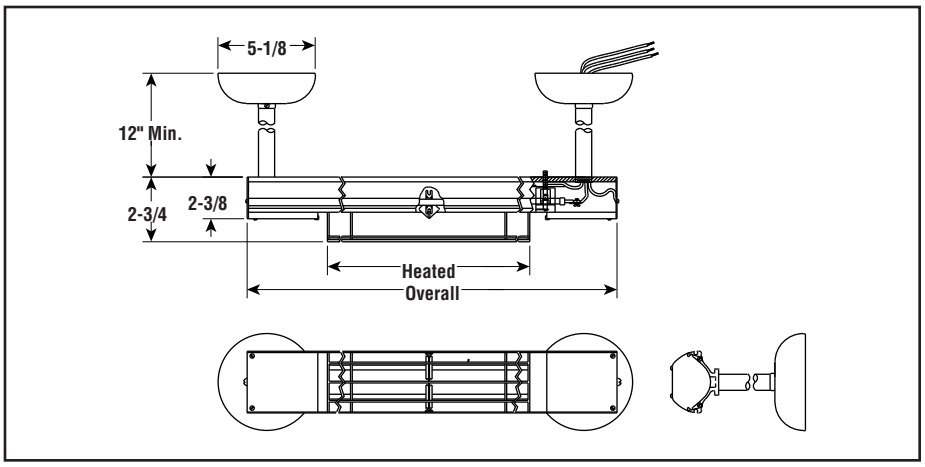

Description

SKR metal sheath infrared radiant heaters provide comfort heat in indoor and protected outdoor locations. The radiant heaters are not dependent upon air movement and offer zone control flexibility. They can be used for supplemental heat in problem spots or as a complete heating system.

Applications

- Indoor Tennis Courts and Racquetball
- Warehouses
- Factories
- Indoor Swimming Pools
- Parts Counters
- Shipping and Receiving Areas

Construction

Extruded Aluminum Housing — Rugged design provides added protection to heating element and reflector.

Protective Grille — Helps protect personnel from direct contact with hot element.

Heating Elements — Triangular cross section 3/8" diameter alloy sheath element located at the focal point of a built-in optically designed, polished aluminum parabolic reflector.

Mounting and Wiring with Hanger Kit consisting of 2 ea. canopies, 12" long 3/8" conduits and hanger brackets.

For Ceiling Mounting to 12 Feet Heights — While stems can be bent to direct radiation, UL listing applies to type SKR installed with a minimum spacing: 12" from ceiling as provided by fixture stems, 6' from floor and 24" from walls.

Refer to WR-80, WR-90, VCF, VCS, VCR, HCP in the Controls section.

Advantages

- Minimum Maintenance
- Easy Installation
- No Toxic Byproducts of Combustion
- Fast Response
- Easy to Control

CAUTION — Not intended for use where flammable vapors, gases, liquids or other combustible atmospheres are present.

Specifications and Ordering Information

Electrical					Dimensions (In.)		Ordering			
kW	Volts	Phase	No. Elem.	Btuh	Heated Length	Overall Length	Model	Stock	PCN	Wt. (Lbs.)
0.8	120	1	1	2,730	16-3/4	24-3/8	**SKR-2083**	**S**	**120184**	9
0.8	208	1	1	2,730	16-3/4	24-3/8	SKR-2083	AS	120192	9
0.8	240	1	1	2,730	16-3/4	24-3/8	**SKR-2083**	**S**	**120205**	9
1.1	120	1	1	3,753	22-5/8	30-5/8	**SKR-3113**	**S**	**120213**	11
1.1	208	1	1	3,753	22-5/8	30-5/8	SKR-3113	NS	120221	11
1.1	240	1	1	3,753	22-5/8	30-5/8	**SKR-3113**	**S**	**120230**	11
1.8	208	1	1	6,142	38-5/8	46-5/8	**SKR-4183**	**S**	**120248**	13
1.8	240	1	1	6,142	38-5/8	46-5/8	**SKR-4183**	**S**	**120256**	13
1.8	275	1	1	6,142	38-5/8	46-5/8	**SKR-4183**	**S**	**120803**	13
2.5	208	1	1	8,530	53-3/8	61-3/8	SKR-5253	AS	120264	17
2.5	240	1	1	8,530	53-3/8	61-3/8	**SKR-5253**	**S**	**120272**	17
2.5	275	1	1	8,530	53-3/8	61-3/8	SKR-5253	AS	120838	17
2.5	480	1	1	8,530	53-3/8	61-3/8	**SKR-5253**	**S**	**120280**	17
3	208	1	1	10,236	65-3/4	73-3/4	**SKR-6303**	**S**	**120299**	19
3	240	1	1	10,236	65-3/4	73-3/4	**SKR-6303**	**S**	**120301**	19
3	275	1	1	10,236	65-3/4	73-3/4	SKR-6303	AS	120846	19
3	480	1	1	10,236	65-3/4	73-3/4	**SKR-6303**	**S**	**120310**	19
3.6	208	1	1	12,283	77-3/4	85-3/4	**SKR-7363**	**S**	**120820**	21
3.6	240	1	1	12,283	77-3/4	85-3/4	**SKR-7363**	**S**	**120328**	21
3.6	275	1	1	12,283	77-3/4	85-3/4	SKR-7363	NS	120811	21
3.6	480	1	1	12,283	77-3/4	85-3/4	**SKR-7363**	**S**	**120336**	21

Stock Status: **S** = stock AS = assembly stock NS = non-stock
To Order—Specify model, PCN, kW, volts, phase and quantity.

Note — Center-to-center distance between canopies is 1-1/2" less than overall length. Canopy diameter is 5-1/4 inches.

KR
Single Fixed Element Radiant Heater

- **0.8 - 1.8 kW**
- **2,730 - 6,142 Btuh**
- **120, 208 and 240 Volt**
- **Single Phase**
- **Protective Grille**

Dimensions (Inches)

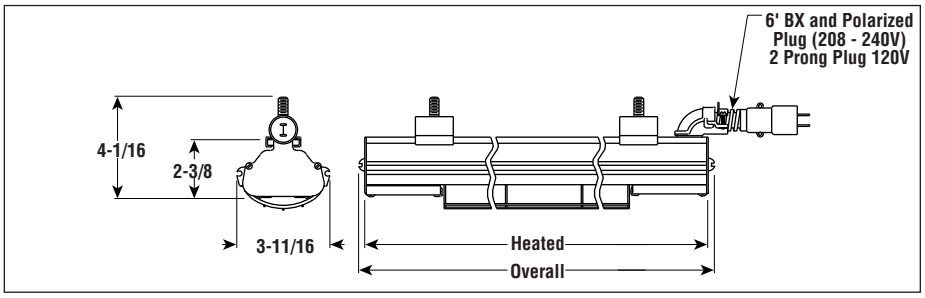

Description

KR metal sheath infrared radiant heaters provide comfort heat in indoor and protected outdoor locations. They may be ceiling mounted by chains, steel strap or other means and can be mounted elsewhere at any angle. Use also for supplemental heat in problem spots or as a complete heating system.

Applications

- Spot Heating
- Aisleways
- Entryways
- Farm Buildings
- Parts Counters
- Loading Docks

Construction

Extruded Aluminum Housing — Rugged design provides added protection to heating element and reflector.

Highly Polished Aluminum Reflectors give good reflectivity and heat transfer, and are easily cleaned to maintain energy efficiency.

Protective Grille — Helps protect personnel from direct contact with hot element.

Heating Elements — Triangular cross section 3/8" diameter alloy sheath element located at the focal point of a built-in optically designed, polished aluminum parabolic reflector.

Mounting Clamps — Two sliding clamps are shipped with the heater for attachment to supports.

Field Wiring is accomplished with a 6" long 1/2" flexible metallic conduit with male plug. All 208 to 240V heaters have a polarized plug, while 120V heaters have a 3-prong grounded plug.

For Horizontal, Vertical or Angled Mounting on your supporting framework. Type KR is provided with 6" of flexible metallic conduit connected to a standard male plug.

Advantages

- Minimum Maintenance
- Easy Installation
- No Toxic Byproducts of Combustion
- Fast Response
- Easy to Control

Ceiling Mounting — Mounting chains, steel strap or other means and can be conveniently mounted at virtually any angle.

CAUTION — Not intended for use where flammable vapors, gases, liquids or other combustible atmospheres are present.

Specifications and Ordering Information

Electrical					Dimensions (In.)		Ordering			
kW	Volts	Phase	No. Elem.	Btuh	Heated Length	Overall Length	Model	Stock	PCN	Wt. (Lbs.)
0.8	120	1	1	2,730	16-3/4	24-3/8	**KR-2083B**	**S**	**120344**	9
0.8	240	1	1	2,730	16-3/4	24-3/8	KR-2083B	AS	120352	9
1.1	120	1	1	3,753	22-5/8	30-5/8	**KR-3113B**	**S**	**120360**	11
1.1	208	1	1	3,753	22-5/8	30-5/8	**KR-3113BV**	**S**	**120379**	11
1.1	240	1	1	3,753	22-5/8	30-5/8	**KR-3113B**	**S**	**120387**	11
1.8	208	1	1	6,142	38-5/8	46-5/8	**KR-4183BV**	**S**	**120395**	13
1.8	240	1	1	6,142	38-5/8	46-5/8	**KR-4183B**	**S**	**120408**	13

Stock Status: S = stock AS = assembly stock NS = non-stock
To Order—Specify model, PCN, kW, volts, phase and quantity.

Refer to WR-80, WR-90, VCF, VCS, VCR, HCP in the Controls section.

WR
Wall Mounted Room Thermostats

- **Heavy Duty**
  25 Amps, 120 Vac
  22 Amps, 240 Vac
  18 Amps, 277 Vac
- **Positive Snap-Action Switch**
- **3 Degree Control Differential**
- **UL Listed, CSA Certified**

WR-80

WR-90

Description

WR-80
Range 40-80°F Internal Sensing Element Indicating Thermometer

WR-90
External Sensing Bulb Range 20-90°F

The WR Series Room Thermostats are designed to directly control individual heaters or, by using an external contactor, can control several heaters. The WR-90 is particularly useful for maintaining lower temperatures (in garages, warehouses, etc.) and avoiding unnecessary heating costs.

Each design has accuracy and provides long reliable service with a 3 degree control differential. Both units are heavy duty, single stage, with a SPST line voltage snap-action switch and are finished with tough, metallic gray enamel housings.

WARNING: Hazard of Fire. The WR thermostats are designed for temperature control service only. Because they do not fail-safe, they should not be used for temperature limiting duty.

Dimensions

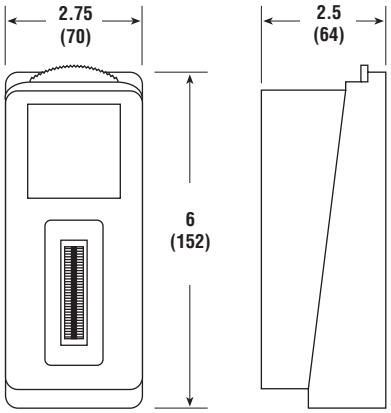

Front View Side View

WR-80

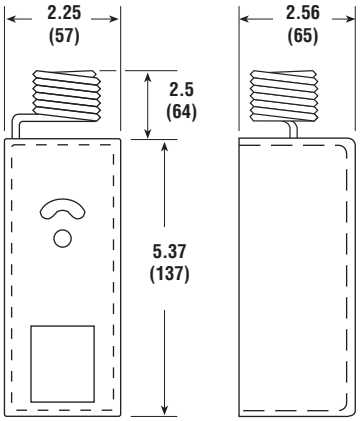

Front View Side View

WR-90

All Dimensions in Inches (mm)

Specifications and Ordering Information

Model	Temp. Range (˚F)	Voltage/Current			Stock	PCN	Wt. (Lbs.)
		120V	240V	277V			
WR-80	40 - 80	25A	22A	18A	**S**	**263177**	1
WR-90	20 - 90	25A	22A	18A	**S**	**263185**	1

Stock Status: **S** = stock AS = assembly stock NS = non-stock

Note —

1. Pilot Duty rating, 125 VA for 120 - 277 Vac.

WR80-EP

Explosion Proof Room Thermostat

- **Heavy Duty**
  25 Amps, 120 Vac
  22 Amps, 240 Vac
  18 Amps, 277 Vac
- **Positive Snap-Action Switch**
- **3 Degree Control Differential**
- **Temperature Range 40 - 90°F**

Description

The WR80-EP Room Thermostat is designed to control individual heaters directly or by using an external contactor can control several heaters. It is suitable for Class I, Division I, Group D and Class II, Division I, Groups E, F and G locations.

The WR80-EP provides accuracy, long and reliable service, with a 3 degree differential.

The control is a heavy duty, single stage, SPST line voltage snap-action switch. It features an external, coiled sensing element and adjustable setpoint knob.

WARNING: Hazard of Fire. The WR80-EP thermostat is designed for temperature control service only. Because it is not fail-safe, it should not be used for temperature limiting duty.

Dimensions

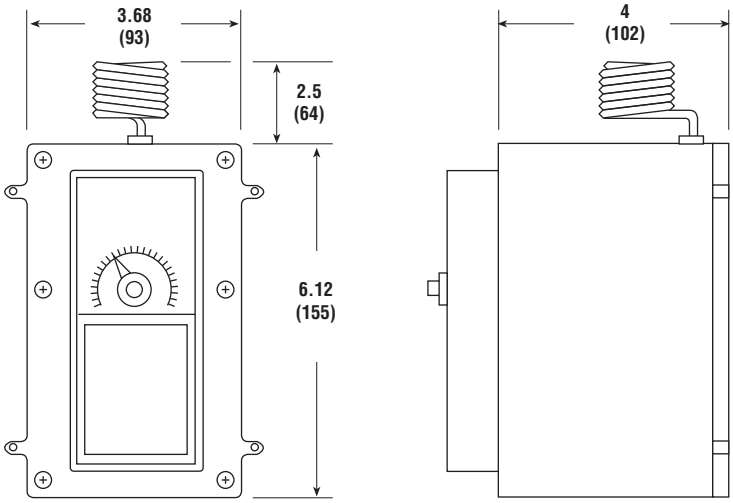

Front View

Side View

All Dimensions in Inches (mm)

Specifications and Ordering Information

Model	Temp. Range (°F)	Voltage/Current			Stock	PCN	Wt. (Lbs.)
		120V	240V	277V			
WR80-EP	40-90	25A	22A	18A	**S**	**266124**	1

Stock Status: **S** = stock AS = assembly stock NS = non-stock

Note —

1. Pilot Duty rating, 125 VA for 120 - 277 Vac.

WT

Wall Mounted Residential & Commercial Room Thermostat

- **22 Amps, 120 Vac - 240 Vac 18 Amps, 277 Vac**
- **45 - 75°F Temperature Range**
- **Ivory Color**
- **Mounts in Standard Electrical Box**

Description

The WT-121 and WT-122 Room Thermostats are designed to control individual heaters or may be used with an external contactor. The WT-121 provides heat control with a SPST snap action switch (open on rise) for breaking one line of the power source. The WT-122 also is a heat control but uses a DPST snap action switch and will break both lines of the power source.

Both models include heat anticipators—assuring closer and more even temperature regulation.

WARNING: Hazard of Fire. The WT thermostats are designed for temperature control service only. Because they are not fail-safe, they should not be used for temperature limiting duty.

Dimensions

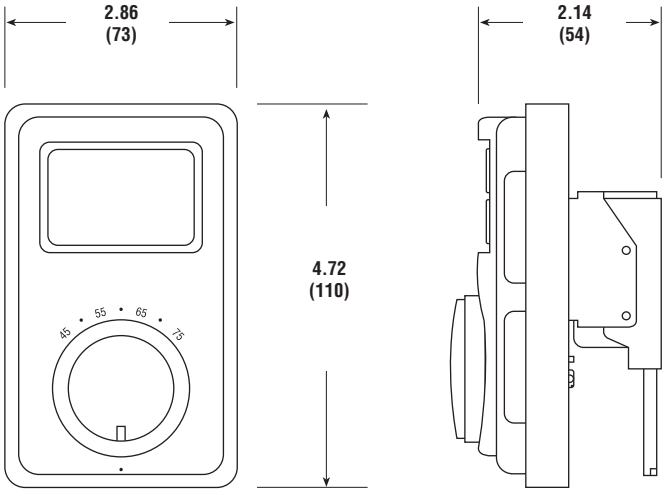

Front View

Side View

All Dimensions in Inches (mm)

Specifications and Ordering Information

Model	Type	Temp. Range (˚F)	Voltage/Current 120V	208V	240V	277V	Stock	PCN	Wt. (Lbs.)
WT-121	SPST	45-75	22A	22A	22A	18A	**S**	**309999**	1
WT-122	DPST	45-75	22A	22A	22A	18A	**S**	**310009**	1

Stock Status: **S** = stock AS = assembly stock NS = non-stock

WTL

Wall Mounted Residential & Commercial Room Thermostat

- **24 - 30 Vac, 1A Maximum**
- **40 - 80°F Temperature Range**
- **Beige Color**
- **Mounts in Standard Electrical Box**
- **Screw Terminals for Signal Wiring**

Description

The WTL-121 Room Thermostat is designed for space heaters with low voltage control circuits. Its operation is from a sealed mercury cell providing long life and protection from environmental dirt and moisture. The heating anticipator provides a narrow differential control of room temperature, 1°F.

WARNING: Hazard of Fire. The WTL thermostat is designed for temperature control service only. Because it is not fail-safe, it should not be used for temperature limiting duty.

Dimensions

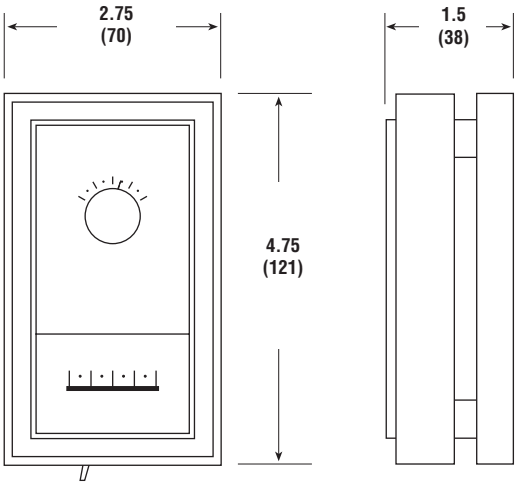

Front View

Side View

All Dimensions in Inches (mm)

Specifications and Ordering Information

Model	Type	Temp. Range (˚F)	Voltage Current 24-30 Vac	Stock	PCN	Wt. (Lbs.)
WTL-121	SPST Low Volt (opens on rise)	40 - 80	1A Max.	**S**	**308005**	1

Stock Status: **S** = stock AS = assembly stock NS = non-stock

WCRT

Corrosion Resistant Wall Mounted Industrial Room Thermostat

- **25-Amps, 120 - 240 Vac**
  22 - Amps, 277 Vac
- **Positive Snap-Action Switch**
- **Heating or Cooling Control, SPDT Contacts**
- **NEMA 4X Weatherproof Enclosure**
- **40 - 100°F Temperature Range**
- **2.5°F Differential**

Description

The WCRT Room Thermostat is designed to directly control an individual heater. Using an external contactor, it can control several heaters. The WCRT provides high level accuracy and sensitivity with 2.5°F differential. The control has a SPDT output and can be used for heating or cooling.

WARNING: Hazard of Fire. The WCRT thermostat is designed for temperature control service only. Because it is not fail-safe, it should not be used for temperature limiting duty.

Applications

- Can be used to control room temperature in harsh environments regardless of whether heating or cooling is required.
- Tolerates continuous spraying with water, high humidity, airborne contamination and moderately corrosive conditions.

Ratings for Other Electrical Applications

Type of Service	Maximum Rating (Amps AC)		
	120V	240V	277V
Locked Rotor	80	60	50
Inductive	16	12	10
Pilot Duty	125VA	125VA	125VA

Suitable for 24 Vac Operation @ 100mA Minimum

Features

- Shielded sensing bulb is nickel-plated and attached directly to bottom of enclosure where it is shielded from damage and accumulation of insulating particles.
- Sealed Noryl case with neoprene gasket to seal out dust and moisture. Knob opening is closed with lubricated "O" ring.
- Adjustable Knob setting is accurate to ± 2.5°F with large easily-read numerical dial.
- Positive OFF for heating is provided by setting unit to LO position. (At LO Position, heat circuit is open and cool circuit is closed at any temperature.)

Dimensions

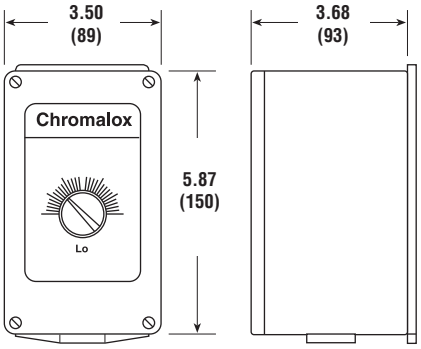

Front View Side View

All Dimensions in Inches (mm)

Specifications and Ordering Information

Model	Type	Temp. Range (˚F)	Voltage/Current, Resistive			Voltage/Current, Inductive			Stock	PCN	Wt. (Lbs.)
			120V	240V	277V	120V	240V	277V			
WCRT-100	SPDT	40-100	22A	22A	18A	16A	12A	10A	**S**	**223589**	1

Stock Status: **S** = stock AS = assembly stock NS = non-stock

SRL
Self-Regulating Low Temperature

- **Self-Regulating, Energy Efficient**
- **16 AWG Buss Wire**
- **Circuit Lengths to 660 Feet**
- **Process Temperature Maintenance to 150°F (65°C)**
- **Maximum Continuous Exposure Temperature, Power Off, 185°F (85°C)**
- **Industrial Freeze Protection Applications**
- **Freeze Protection of Fire Protection System Piping**
- **Field Splicing Without Disrupting Heat Output**
- **3, 5, 8 and 10 W/Ft.**
- **120 and 208 - 277 Volt From Stock**
- **Approximate Size 3/8"W x 1/8"H**
- **Min. Bend Radius 1-1/8"**
- **For Use on Metal and Plastic Pipes**

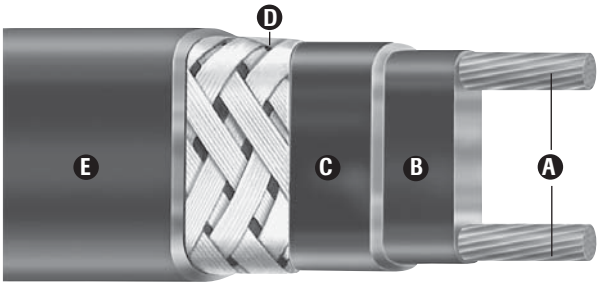

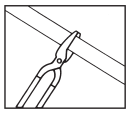
Cut to Length in Field

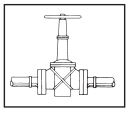
Can be Single Overlapped

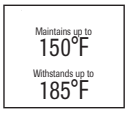

Low Tempera-ture

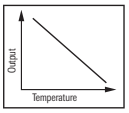

Self Regulating Output

Description

Chromalox SRL self-regulating heating cable provides safe, reliable heat tracing for freeze protection of pipes, valves, tanks and similar applications. Constructed of industrial grade 16 AWG buss wire with a tinned copper braid and optional overjacketing, SRL ensures operating integrity in Div. 2 hazardous environments as well as certain corrosive industrial environments. SRL heating cable has a maximum maintenance temperature rating of 150°F (65°C).

Features

- Energy efficient, self-regulating SRL uses less energy when less heat is required.
- Easy to install, SRL can be cut to any length (up to max. circuit length) in the field.
- Field splices can be performed easily in minutes with no scrap or wasted cold sections.
- SRL features lower installed cost than steam tracing, less maintenance expense and less downtime.
- SRL can be single overlapped without burn-out, which simplifies heat tracing of in-line process equipment such as valves, elbows and pumps.
- Because SRL is self-regulating, over-temperature conditions are minimized.
- Chromalox termination, splice, tee and end seal kits reduce installation time.

Construction

A **Twin 16 AWG Copper Buss Wires —** Provide reliable electrical current capability.

B **Semiconductive Polymer Core Matrix —** "Self-Regulating" component of the cable, its electrical resistance varies with temperature. As process temperature drops, the core's heat output increases; as process temperature rises, the heat output decreases.

C **Polyolefin Jacket —** Flame retardant, electrically insulates the matrix and buss wires and provides resistance to water and some inorganic chemical solutions.

D **Tinned Copper Braid —** Provides additional mechanical protection in any environment and a positive ground path.

E **High Temperature Fluoropolymer or TPR Overjacket (optional) —** Corrosion resistant, flame retardant overjacket is highly effective in many environments. TPR coatings protect against certain inorganic chemical solutions. Fluoropolymer coatings are used for exposure to organic or corrosive solutions. These coatings also protect against abrasion and impact damage.

Approvals

Factory Mutual (FM) Approved for ordinary areas. UL Listed, CSA Certified for ordinary areas. UL listed for freeze protection of fire protection system piping. FM Approved for hazardous (classified) areas when used with DL or EL accessories:

- Class I, Div. 2, Groups B, C, D (gases, vapors)
- Class II, Div. 2, Groups F, G (combustible dust)
- Class III, Div. 2 (easily ignitable fibers and fillings)
- 3 Watt Rated T6 Temperature Class
- 5 and 8 Watt Rated T5 Temperature Class
- 10 Watt Rated T4A Temperature Class.

CSA Certified for hazardous areas when used with DL or EL accessories:

- Class I, Div. 2, Groups A, B, C, D
- Class II, Div. 2, Groups F, G.

SRL

Self-Regulating Low Temperature *(cont'd.)*

Thermal Output Ratings on Insulated Metal Pipe[1]

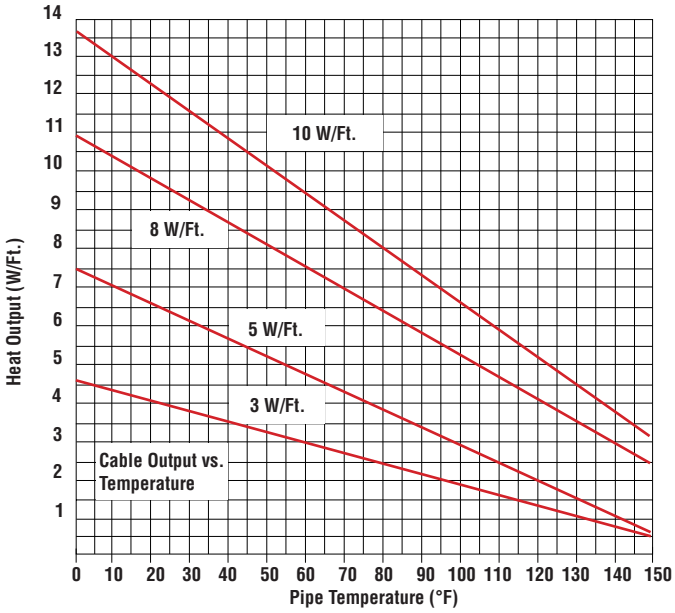

Note 1 — Thermal output is determined per IEEE 515-1997 Standard for testing, design installation, and maintenance of electrical resistance heat tracing section 4.1.11 Method C.

Output Wattage at Alternate Voltages (W/Ft.)

Model	208V	% Change In Output	220V	% Change In Output	277V	% Change In Output
SRL 3	2.4	-20	2.6	-13	3.4	+15
SRL 5	4.1	-18	4.5	-10	5.6	+13
SRL 8	6.88	-14	7.28	-9	8.96	+12
SRL 10	8.7	-13	9.2	-8	11.1	+10

Circuit Breaker Selection (Max. Circuit Lengths in Ft.)

Cable Rating	50°F Start-Up (Ft.)						0°F Start-Up (Ft.)						-20°F Start-Up (Ft.)					
	10A	15A	20A	25A	30A	40A	10A	15A	20A	25A	30A	40A	10A	15A	20A	25A	30A	40A
SRL3-1C	205	305	360	NR	NR	NR	135	200	270	330	360	NR	120	185	245	300	360	NR
SRL3-2C	400	600	660	NR	NR	NR	275	415	555	660	NR	NR	245	370	495	600	660	NR
SRL5-1C	125	185	250	270	NR	NR	90	135	180	225	270	NR	80	120	160	205	245	270
SRL5-2C	250	375	505	540	NR	NR	180	270	360	450	540	NR	160	245	325	405	490	540
SRL8-1C	100	150	200	215	NR	NR	70	110	145	180	215	NR	65	100	130	165	200	210
SRL8-2C	185	285	375	420	NR	NR	135	200	265	335	395	420	120	175	235	300	350	420
SRL10-1C	60	95	130	160	180	NR	50	80	105	130	155	180	45	70	95	120	140	180
SRL10-2C	100	160	210	260	315	360	80	125	170	210	255	340	75	120	160	195	240	320

NR = Not Required. Maximum circuit length has been reached in a smaller breaker size.

Note — Thermal magnetic circuit breakers are recommended since magnetic circuit breakers could "nuisance trip" at low temperature.

SRL
Self-Regulating Low Temperature *(cont'd.)*

Ordering Information

Output (W/Ft.)	Volts	Model	Stock	PCN	Wt./1000' (Lbs.)
3 @ 50°F	120	SRL 3-1C	S	382678	53
		SRL 3-1CT	S	383400	66
		SRL 3-1CR	S	382731	64
	208 - 277	SRL 3-2C	S	382686	53
		SRL 3-2CT	S	383419	66
		SRL 3-2CR	S	382740	64
5 @ 50°F	120	SRL 5-1C	S	382694	53
		SRL 5-1CT	S	383443	66
		SRL 5-1CR	S	382758	64
	208 - 277	SRL 5-2C	S	382707	53
		SRL 5-2CT	S	383451	66
		SRL 5-2CR	S	382766	64
8 @ 50°F	120	SRL 8-1C	S	382555	53
		SRL 8-1CT	S	383460	66
		SRL 8-1CR	S	382598	64
	208 - 277	SRL 8-2C	S	382563	53
		SRL 8-2CT	S	383478	66
		SRL 8-2CR	S	382600	64
10 @ 50°F	120	SRL 10-1C	S	382820	53
		SRL 10-1CT	S	383486	66
		SRL 10-1CR	S	382846	64
	208 - 277	SRL 10-2C	S	382838	53
		SRL 10-2CT	S	383494	66
		SRL 10-2CR	S	382854	64

To Order — Specify length, model, PCN and installation accessories.

Accessories

Accessories		U Series	DL	EL
Power Connection	Heat trace to electrical service connection	UPC	RTPC	SSK
Splice & Tee		UMC	RTST	RT-RST
End Seal	For terminating cable	UES	RTES	RT-RES
Thermostat	Ambient air sensing thermostat		RTAS	B-100/B-121
	Line sensing mechanical thermostat		RTBC	E-100/E-121

To Order — General Application & Installation Accessories such as tape, pipe straps, warning labels, etc., refer to the DL & EL General Application Accessories page at the end of this section.

Ordering Information

To Order — *Complete the Model Number using the Matrix provided.*

Contact your Local Chromalox Sales office for monitor wire option.

Model	Self-Regulating Low Temperature			
SRL	Self-Regulating, Low Temperatue Heating Cable			
	Code	**Output (W/Ft.)**		
	3	Three		
	5	Five		
	8	Eight		
	10	Ten		
		Code	**Voltage**	
		1	120	
		2	208 - 277	
			Code	**Braid and Overcoat Options**
			C	Tin-Plated copper metallic braid for additional protection and ground path
			CT	Fluoropolymer corrosion resistant overjacket over braid for hostile/corrosive environments
			CR	TPR overjacket over braid for protection against certain inorganic chemical solutions
SRL	5	1	C	**Typical Model Number**

More Information is Available Online on Heat Trace.

Bookmark Your Browser to ***www.chromalox.com*** *and Select* ***Manuals****.*

SELF-REGULATING

SRM/E

Self-Regulating Medium Temperature

- **Self-Regulating, Energy Efficient**
- **14 AWG Buss Wire**
- **Circuit Lengths to 780 Feet**
- **Process Temperature Maintenance to 302°F (150°C)**
- **Maximum Continuous Exposure Temperature, Power Off, 420°F (215°C)**
- **Industrial Process Maintenance Applications**
- **Industrial Freeze Protection Applications**
- **Freeze Protection of Fire Protection System Piping**
- **Steam Cleanable on Process Equipment Up to 300 PSIG**
- **3, 5, 8, 10, 15 and 20 W/Ft.**
- **120 and 208 - 277 Volt From Stock**
- **Approximate Size 1/2"W x 1/4"H**
- **Minimum Bend Radius 1-1/2"**
- **For Use on Metallic Pipes Only**

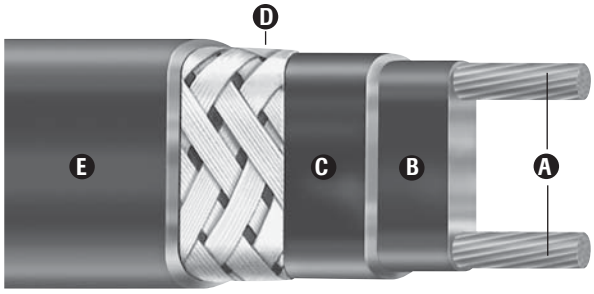

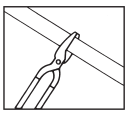

Cut to Length in Field

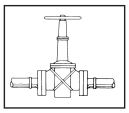

Can be Overlapped

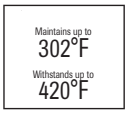

Medium Temperature

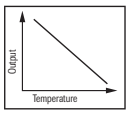

Self Regulating Output

Description

Chromalox SRM/E self-regulating heating cable provides safe, reliable heat tracing for process temperature maintenance and freeze protection of pipes, valves, tanks and similar applications. Constructed of industrial grade 14 AWG buss wire with metal braid and optional overjacketing, SRM/E ensures operating integrity in most hostile industrial environments. The 420°F (215°C) maximum exposure temperature rating allows steam cleaning of process equipment with up to 300 psig steam.

Enhanced Features

- Industrial Grade, 14 gauge buss wire has higher current capacity, allowing longer circuit lengths up to 780 feet.
- Superior matrix to buss wire bonding ensures overall operating integrity and performance.
- High output, 20 W/Ft. heating cable.
- All ratings are available from stock.

Features

- Energy efficient, self-regulating SRM/E uses less energy when less heat is required.
- Easy to install, SRM/E can be cut to any length (up to max. circuit length) in the field.
- Field splices can be performed easily in minutes with no scrap or wasted cold sections.
- With lower installed cost than steam tracing, SRM/E features less maintenance expense and downtime.
- SRM/E can be single overlapped without burnout, which simplifies heat tracing of in-line process equipment such as valves, elbows and pumps.
- Because SRM/E is self-regulating, overtemperature conditions are minimized.
- Chromalox termination, splice, tee and end seal kits reduce installation time.

Construction

A **Twin 14 AWG Copper Buss Wires —** Provide reliable electrical current capability.

B **Semiconductive Polymer Core Matrix —** "Self-Regulating" component of the cable, its electrical resistance varies with temperature. As process temperature drops, the core's heat output increases; as process temperature rises, the heat output decreases.

C **High Temperature Fluoropolymer Jacket —** Flame retardant, electrically insulates the matrix and provides corrosion resistance.

D **Metallic Braid —** Provides additional mechanical protection in any environment and a positive ground path.

E **High Temperature Fluoropolymer Overjacket (optional) —** Corrosion resistant, flame retardant overjacket is highly effective in hostile, aqueous and chemically active environments. It also protects against abrasion and impact damage.

Approvals

Factory Mutual (FM) Approved for ordinary areas. UL Listed, CSA Certified for ordinary areas. UL listed for freeze protection of fire protection system piping. FM Approved for hazardous (classified) areas when used with DL accessories:

- Class I, Div. 2, Groups B, C, D (gases, vapors)
- Class II, Div. 2, Groups F, G (combustible dust)
- Class III, Div. 2 (easily ignitable fibers and filings)
- 3, 5 and 8 Watt Rated T3 Temperature Class
- 10, 15 and 20 Watt Rated T2D Temperature Class

CSA Certified for hazardous (classified) areas when used with DL accessories:

- Class I, Div. 2, Groups A, B, C, D
- Class II, Div. 2, Groups F, G
- Rated T3[1] Temperature Class.

Note 1 Exception — Cable Surface Temperature shall not exceed 190°C in Class II, Div. 2, Group F; 165°C in Class II, Div. 2, Group G.

SRM/E

Self-Regulating Medium Temperature *(cont'd.)*

Thermal Output Ratings on Insulated Metal Pipe[1]

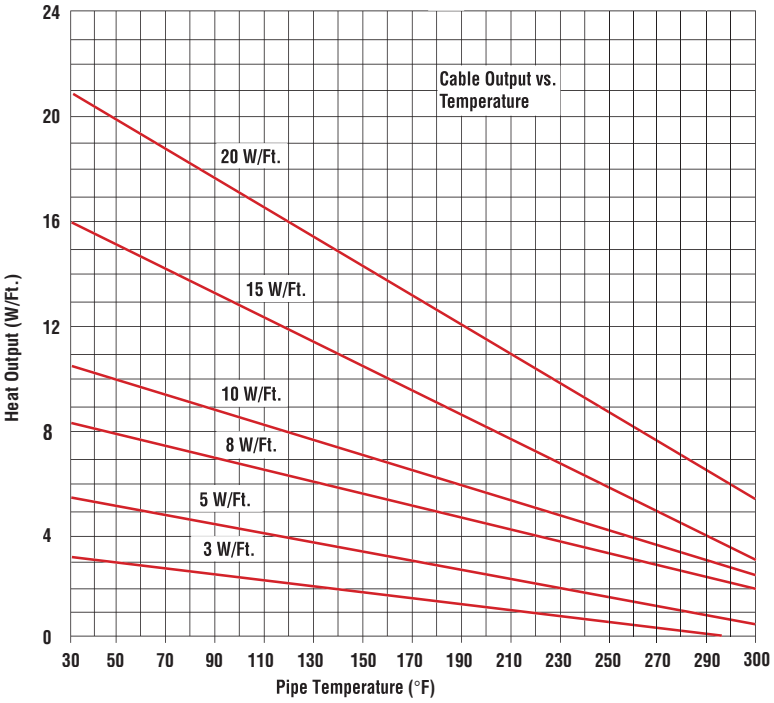

Note 1 — Thermal output is determined per IEEE 515-1997 Standard for testing, design installation, and maintenance of electrical resistance heat tracing section 4.1.11 Method C.

Output Wattage at Alternate Voltages (W/Ft.)

Model	208V	% Change In Output	220V	% Change In Output	277V	% Change In Output
SRM/E 3	2.31	-23	2.55	-15	3.90	+23
SRM/E 5	3.85	-23	4.25	-15	6.45	+23
SRM/E 8	6.4	-20	6.88	-14	10.24	+22
SRM/E 10	8.3	-17	8.80	-12	12.50	+20
SRM/E 15	12.75	-15	13.50	-10	18.45	+19
SRM/E 20	17.6	-12	18.40	-8	24.40	+19

Circuit Breaker Selection (Max. Circuit Lengths in Ft.)

Cable Rating	50°F Start-Up (Ft.)					0°F Start-Up (Ft.)					-20°F Start-Up (Ft.)				
	15A	20A	30A	40A	50A	15A	20A	30A	40A	50A	15A	20A	30A	40A	50A
SRM/E 3-1	285	385	NR	NR	NR	275	375	385	NR	NR	265	365	385	NR	NR
SRM/E 3-2	575	770	780	NR	NR	540	750	780	NR	NR	525	740	780	NR	NR
SRM/E 5-1	180	240	360	375	NR	165	220	330	375	NR	155	210	310	375	NR
SRM/E 5-2	360	480	720	750	NR	325	430	645	750	NR	310	415	620	750	NR
SRM/E 8-1	145	190	285	325	NR	135	175	265	325	NR	130	165	250	325	NR
SRM/E 8-2	285	380	575	650	NR	255	345	520	650	NR	245	335	490	650	NR
SRM/E 10-1	95	125	190	250	NR	90	110	175	250	NR	85	100	170	245	250
SRM/E 10-2	190	255	385	490	NR	165	225	345	490	NR	155	215	330	470	490
SRM/E 15-1	70	95	145	190	210	65	85	125	165	210	60	80	120	150	210
SRM/E 15-2	145	190	290	385	420	120	175	270	360	420	115	165	260	340	420
SRM/E 20-1	60	75	115	155	160	50	65	105	140	160	45	65	100	135	160
SRM/E 20-2	115	155	230	305	350	100	135	200	270	350	90	130	195	255	335

NR = Not Required. Maximum circuit length has been reached in a smaller breaker size.

Note — Thermal magnetic circuit breakers are recommended since magnetic circuit breakers could "nuisance trip" at low temperature.

SRM/E

Self-Regulating Medium Temperature *(cont'd.)*

Ordering Information

Output (W/Ft.)	Volts	Model	Stock	PCN	Wt./1000' (Lbs.)
3 @ 50°F	120	**SRM/E 3-1C**	**S**	**388025**	80
		SRM/E 3-1CT	**S**	**385561**	100
	208 - 277	**SRM/E 3-2C**	**S**	**385490**	80
		SRM/E 3-2CT	**S**	**385570**	100
5 @ 50°F	120	**SRM/E 5-1C**	**S**	**388084**	80
		SRM/E 5-1CT	**S**	**388092**	100
	208 - 277	**SRM/E 5-2C**	**S**	**388113**	80
		SRM/E 5-2CT	**S**	**388121**	100
8 @ 50°F	120	**SRM/E 8-1C**	**S**	**388148**	80
		SRM/E 8-1CT	**S**	**388156**	100
	208 - 277	**SRM/E 8-2C**	**S**	**388172**	80
		SRM/E 8-2CT	**S**	**388180**	100
10 @ 50°F	120	**SRM/E 10-1C**	**S**	**388201**	80
		SRM/E 10-1CT	**S**	**388210**	100
	208 - 277	**SRM/E 10-2C**	**S**	**388236**	80
		SRM/E 10-2CT	**S**	**388244**	100
15 @ 50°F	120	**SRM/E 15-1C**	**S**	**388260**	80
		SRM/E 15-1CT	**S**	**388279**	100
	208 - 277	**SRM/E 15-2C**	**S**	**388308**	80
		SRM/E 15-2CT	**S**	**388316**	100
20 @ 50°F	120	**SRM/E 20-1C**	**S**	**388332**	80
		SRM/E 20-1CT	**S**	**388340**	100
	208 - 277	**SRM/E 20-2C**	**S**	**388367**	80
		SRM/E 20-2CT	**S**	**388375**	100

To Order — Specify length, model, PCN and installation accessories.

Accessories

Accessories		U Series	DL	EL
Power Connection	Heat trace to electrical service connection	UPC	RTPC	SSK
Splice & Tee		UMC	RTST	RT-RST
End Seal	For terminating cable	UES	RTES	N/A
Thermostat	Ambient air sensing thermostat		RTAS	B-100/B-121
	Line sensing mechanical thermostat		RTBC	E-100/E-121

To Order — General Application & Installation Accessories such as tape, pipe straps, warning labels, etc., refer to the DL & EL General Application Accessories page at the end of this section.

Ordering Information

To Order — *Complete the Model Number using the Matrix provided.*

Model	Self-Regulating Medium Temperature			
SRM/E	Self-Regulating, Medium Temperatue Enhanced Heating Cable			
	Code	**Output (W/Ft.)**		
	3	Three		
	5	Five		
	8	Eight		
	10	Ten		
	15	Fifteen		
	20	Twenty		
		Code	**Voltage**	
		1	120	
		2	208 - 277	
			Code	**Braid and Overcoat Options**
			C	Tin-Plated copper metallic braid for additional protection and ground path
			CT	Fluoropolymer corrosion resistant overjacket over braid for hostile/ corrosive environments
SRM/E	**8**	**8**	**CT**	**Typical Model Number**

More Information is Available Online on Heat Trace.

Bookmark Your Browser to ***www.chromalox.com*** *and Select* ***Manuals****.*

CWM

Constant Wattage Medium Temperature

- **Uniform Thermal Output**
- **Accurate, Easy to Control and Monitor**
- **Low Energy Cost**
- **No Inrush at Any Ambient**
- **Industrial/Process and Commercial/Construction Applications**
- **Flexible to Most Any Configuration**
- **Fluoropolymer Jacket**
- **Maximum Exposure Temperature, Power Off, 392°F (200°C)**
- **Steam Cleanable on Process Equipment Up to 190 PSIG (Power Off)**
- **4, 8 and 12 W/Ft.**
- **120, 208 - 277 and 480 Volt From Stock**
- **Approximate Size 1/4"W x 1/8"H**
- **Minimum Bend Radius 1-1/4"**
- **For Use on Metallic Pipes Only**
- **Consult Factory for Use on Plastic Pipes**

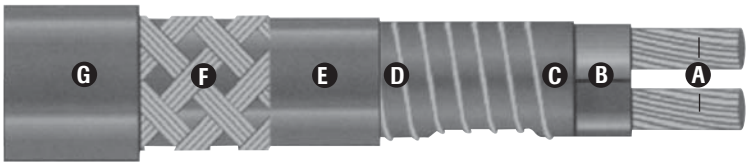

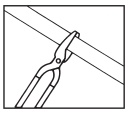

Cut to Length in Field

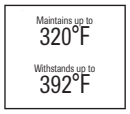

Medium Temperature

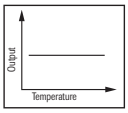

Constant Wattage Output

Note — Consult maximum maintenance temperature chart on page G-15 for allowable watt densities.

Description

Chromalox CWM constant wattage heating cable is a proven, reliable solution for industrial process temperature maintenance and freeze protection. CWM features a parallel heating core that produces uniform thermal output over its entire length. Using a single power point, you can easily configure and install a heat tracing system as short as several feet or as long as 780 feet right in the field. System design only requires that you match the CWM cable thermal output to the heat loss of your piping system.

CWM is flexible at most ambient temperatures and can be wrapped around piping and complex fittings. It is rugged, easy to monitor and maintain temperature, and has zero inrush at start-up. With 392°F (200°C) fluoropolymer electrical insulation overjacketing, CWM has outstanding electrical and thermal properties, and is well suited for most chemically hostile environments. An extensive range of wattages and voltages are available immediately from Chromalox stock.

Features

- Durable, non-aging fluoropolymer jacket ensures long service life and can be used in some hostile environments.
- Flexible, easy to install on most equipment and delivers long-term reliable performance.
- Eliminates the need for oversized wiring or switchgear.
- Accurate temperature, reliable electric heat that can be consistently controlled and easily monitored.
- Safe and rugged.
- Parallel circuitry allows cut-to-length.
- High performance, rated to withstand up to 392°F saturated steam (190 psig) temperature (power off).
- Low profile, uses standard size thermal insulation on piping and process equipment.

Construction

A **Twin 12 AWG Copper Buss Wires —** Provide reliable, consistent electrical current.

B **FEP Insulation Jacket —** Electrically insulates buss wires.

C **Pairing Jacket —** Secures two buss wires together and provides wrapping surface for Nichrome wire.

D **Nickel Chromium Wire —** Heating component of the cable.

E **FEP Insulation —** Rugged outer sheath protects heating cable, assures longer service life, and provides protection against environmental application hazards.

F **Tinned Copper Braid —** Plated copper braid increases robust construction, provides ground path and provides additional protection in any location. Suffix "C" in model number.

G **FEP Overjacket (optional) —** Fluoropolymer overjacket, over the braid, provides protection from most aqueous and chemically corrosive solutions. Suffix "T" in model number.

Approvals[1]

UL Listed for ordinary areas.

CSA Certified for ordinary and:

- Class I, Div. 2, Groups A, B, C, D
- Class II, Div. 2, Groups F, G. Rated T3 Temperature Class[2].

Notes —

1. Depends on specific model.
2. Exception: Cable surface temperature shall not exceed 190°C in Class II, Div. 2, Group F; 165°C in Class II, Div. 2, Group G.

CWM

Constant Wattage Medium Temperature *(cont'd.)*

Specifications

Model	Output (W/Ft.)	Nominal Voltage (Vac)	Circuit Load (Amps/Ft.)	Max. Circuit Length (Ft.)
CWM 4-1CT	4	120	0.033	350
CWM 8-1CT	8	120	0.067	240
CWM 12-1CT	12	120	0.100	200
CWM 4-2CT	4	240	0.017	700
CWM 8-2CT	8	240	0.033	480
CWM 12-2CT	12	240	0.050	400
CWM 12-4CT	12	480	0.025	780

Output Wattage at Various Operating Voltages (Ft.)

Model	120V	208V	220V	240V	277V	480V
CWM 12-1	12	—	—	—	—	—
CWM 8-1	8	—	—	—	—	—
CWM 4-1	4	—	—	—	—	—
CWM 12-2	3	9	10.1	12	—	—
CWM 8-2	2	6	6.7	8	—	—
CWM 4-2	—	3	3.4	4	—	—
CWM 12-4	—	2.3	2.5	3	4	12

Maximum Maintenance Temperatures

Output (W/Ft.)	Temperatures (°F)								
	3	4	6	6.7	8	9	10.1	10.6	12
w/o AT-1 Tape	340	325	293	282	262	246	229	222	200
w/ AT-1 Tape	350	344	332	328	320	314	307	304	296

CWM

Constant Wattage Medium Temperature *(cont'd.)*

Ordering Information

Output (W/Ft.)	Nominal Voltage (Vac)	Model	Stock	PCN	Wt./1000' (Lbs.)
4	120	**CWM 4-1C**	**S**	**392040**	96
		CWM 4-1CT	**S**	**392075**	110
	240	**CWM 4-2C**	**S**	**392059**	96
		CWM 4-2CT	**S**	**392083**	110
8	120	**CWM 8-1C**	**S**	**392139**	96
		CWM 8-1CT	**S**	**392163**	110
	240	**CWM 8-2C**	**S**	**392147**	96
		CWM 8-2CT	**S**	**392171**	110
12	120	**CWM 12-1C**	**S**	**392227**	96
		CWM 12-1CT	**S**	**392251**	110
	240	**CWM 12-2C**	**S**	**392235**	96
		CWM 12-2CT	**S**	**392260**	110
	480	**CWM 12-4C**	**S**	**392243**	96
		CWM 12-4CT	**S**	**392278**	110

Accessories

Accessories		U Series	DL	EL
Power Connection	Heat trace to electrical service connection	UPC	RTPC	SSK
Splice & Tee		UMC	RTST	RT-TST
End Seal	For terminating cable	UES	RTES	N/A
Thermostat	Ambient air sensing thermostat		RTAS	B-100/B-121
	Line sensing mechanical thermostat		RTBC	E-100/E-121

To Order — General Application & Installation Accessories such as tape, pipe straps, warning labels, etc., refer to the DL & EL General Application Accessories page at the end of this section.

Ordering Information

To Order — *Complete the Model Number using the Matrix provided.*

Model	Constant Wattage Medium Temperature			
CWM	Constant Wattage, Medium Temperature Heating Cable			
	Code	**Output (W/Ft.)**		
	4	Four		
	8	Eight		
	12	Twelve		
		Code	**Nominal Voltage (Vac)**	
		1	120	
		2	240	
		4	480	
			Code	**Braid and Overcoat Options**
			C	Standard tinned-copper metallic braid for additional protection and ground path
			CT	Fluoropolymer corrosion resistant overjacket over braid for hostile/ corrosive environments
CWM	**5**	**1**	**C**	**Typical Model Number**

More Information is Available Online on Heat Trace.

Bookmark Your Browser to ***www.chromalox.com*** *and Select* ***Manuals****.*

MI
Mineral Insulated High Temperature

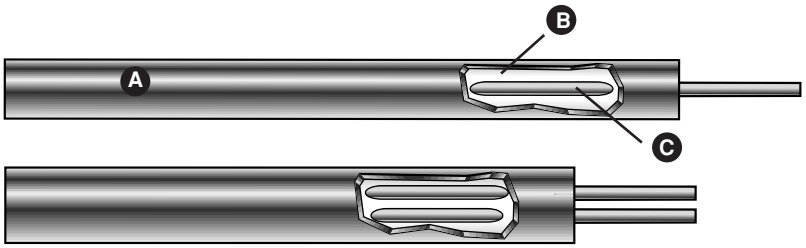

- **Constant Wattage Series Resistance Heating Cable Sets**
- **Process Temperature Maintenance to 900°F**
- **Maximum Exposure Temperature (Power Off) 1100°F**
- **Wattages up to 50 W/Ft.**
- **Corrosion Resistant, Alloy 825 Sheath**
- **Factory Assembled Cable Sets—Ready for Installation**
- **Fully Annealed Sheath allows Field Bending**
- **Suitable for Hazardous Areas, Div. 1 and Div. 2 (Consult Factory for Div. 1 Applications)**
- **For Use on Metallic Pipes Only**

Description

Chromalox MI mineral insulated heating cables provide rugged and reliable heat tracing for a variety of demanding applications. The high nickel alloy sheath, magnesium oxide dielectric insulation and resistance wire construction allow the tracing of equipment up to 900°F maintenance temperatures and excellent resistance to many corrosive environments. At lower temperatures, watt densities of up to 50 W/Ft can be designed. Please contact factory for cable maintence temperature above 400˚F.

Applications

- Tank Heating
- High Temperature Process Maintenance
- Long, Single Circuit Runs
- Cryogenic Applications
- Freeze Protection

Construction

A Metal Sheath: High nickel content Alloy 825 is used for all heating cables and cold leads. Alloy 825 is recognized for its use in high temperature applications, and use in many corrosive environments. This alloy has excellent resistance to pitting, chloride-stress, acid, and alkali corrosion.

B MgO: Highly compacted Magnesium Oxide provides insulation of the resistance wire for voltages up to 600V. Completely sealed sheath protects the MgO from moisture & contamination.

C Resistance Wire: A large number of available resistances enables the design of a large range of lengths and wattages.

D Cold-Lead (Shown Below): Non-heating Alloy 825 sheathed MI cable extends the leads away from the high temperature equipment. 7 ft. long is standard.

E Gland Fitting (Shown Below): Every set includes one or two 1/2" NPT fittings for connection to a junction box. The number of fittings depends on the configuration of the cable set (i.e. single-end or double-end).

Available Designs

Form "A" (one cold section w/ 14 AWG - 12 in. pigtails and termination w/ end cap, 0.50" brass pressure fittings)

Available in two conductor only

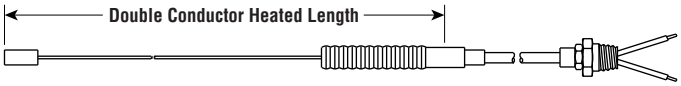

Form "E" (two cold sections w/ 14 AWG - 12 in. pigtails, 0.50" brass pressure fittings)

Available in one conductor or two conductor

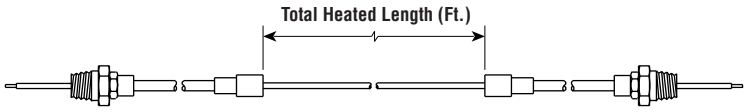

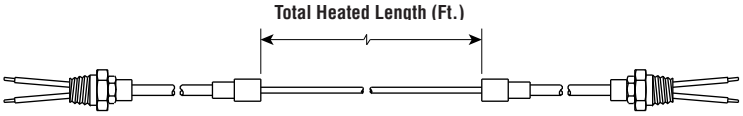

Accessories

QHT-3 High Temperature Adapter is used to heat sink the hot section transistion as it passes through the thermal insulation when the hot to cold connection must be located outside the thermal insulation due to sheath temperatures over 600˚F, and cable wattage above 20 w/ft.

Note — Standard cable sets include 7 feet non-heating cable with 12" pigtails, brazed to customer specified length of MI heating cable. Standard gland fittings are 1/2" NPT.

MI
Mineral Insulated High Temperature *(cont'd.)*

1. **Heater Design**
   Determine heater design to use.

2. **Calculate Heat Loss**
   Using the Chromalox Design Guide for Heat Tracing (PJ304), calculate the heat loss of the system. To calculate the heat loss (Watts) you will need to know pipe diameter, insulation type and thickness, minimum ambient temperature and the pipe mainte nance temperature. In addition, Chromalox® offers ChromaTrace, a heat trace design program to facilitate heat tracing system design.

3. **Determine Total Cable Length**
   In addition to the system piping, in-line equipment such as valves, flanges and pipe supports require additional heat tracing to maintain the system operating temperature. See Chromalox Design Guide (PJ304) to determine the proper component cable allowances for your system. Add the heated pipe lenth and the component cable allowance lengths to calculate the total cable length.

   Guidelines for tracing tanks and vessels are also given in the Chromalox Design Guide (PJ304)

4. **Determine Available Voltage (V)**
   Determine what Voltage is available. At a given voltage, not every cable length and power output is available. For example, shorter lengths may require 120V supply. Trying several voltages may result in a more efficient design.

5. **Calculate Resistance per Foot (R/ft) using the desired Watts per Foot (W/ft) and cable length (L)**
   $R/ft_{desired} = V^2/(W/ft_{desired} \times L^2)$

6. **Select the Proper Resistance per Foot (R/ft) Rating**
   Choose a cable having equal or the next lower resistance per foot value from the Ordering Information Table

7. **Calculate Actual W/Ft. and Total Wattage (W_{TOTAL})**
   $W/ft_{actual} = V^2/(R/ft_{actual} \times L^2)$

   $W_{TOTAL} = W/ft_{actual} \times L$

8. **Determine Current Draw (I)**
   $I = V/(R/ft_{actual} \times L)$

9. **Select Heater Single or Double Conductor Length**
   The cold lead is determined by the customer or by using a standard 7 ft. Standard cold lead is #14 awg.

10. **Convert Design to a Model Number**.

Note:
Some cable resistances must be modified according to the resistance curves in the Order Information Table. Modify your resistance according to the following procedure:

a. Based on the desired power output in Watts/ft, use Graph-1 to determine the Sheath Temperature Rise for the particular cable diameter you select.

b. Add the sheath temperature rise to the desired maintenance temperature to determine the cable resistance at operating conditions.

c. From Graph-2, determine the cable resistance multiplier for your application. Multiply the resistance value given in the resistance tables by this multiplier to determine the cable resistance at operating conditions.

d. Determine the electrical and thermal conditions. Once the cable resistance has been selected, verify the performance of the cable you have selected from Graph-3 and 4.

Optional Construction

Prefix	Suffix	Description
P		Pulling Eye for "A" form only
X		Oversized cold section current >25 Amps and <40 Amps
	EM	Mounting of hot-cold junction outside thermal insulation (freeze protection of lines over 600°F)
	QT	QHT-3 High temperature adapter
	UG	UL listing tag**
	UH	UL hazardous area listing tag**
	PH	FM hazardous area listing tag**
	CH	CSA hazardous area listing tag**
	CHB	CSA group B hazardous area listing tag**

**Required volts,amps, and watts with each cable order

Model — **Heater Set Design "A" or "E"**

Cable Number (determined by resistance value required for needed wattage output)

Cable Heated Section Length in Feet

Cable Cold Section Length in Feet

Heater Set Total Wattage (W_{TOTAL})

Operating Voltage (V)

P	A	670B	150	07	1477W	120V	UG	Typical Model Number

(120V, 9.9 w/ft cable, 150 feet long, with pulling eye and UL listing tag)

MINERAL INSULATED

MI

Mineral Insulated High Temperature *(cont'd.)*

Ordering Information Available Resistances
Two Conductor, 3/16" Dia. O.D., Alloy 825, 300 Volts

Cable Number	Ohms/ft	Maximum Exposure Temperature Rating °F	Resistance Curve
556K	0.043	600	1
658K	0.0581		1
674K	0.0742		1
693K	0.0926		1
712K	0.1170		1
715K	0.1470		1
721K	0.213		3
732K	0.319	1100	N/A
742K	0.416		
752K	0.520		
766K	0.660		
774K	0.740		
783K	0.830		
810K	1.00		
813K	1.30		
818K	1.80		
824K	2.34		
830K	2.96		
838K	3.70		
846K	4.72		
860K	5.60		
866K	6.60		
894K	9.00		
919K	18.00		

Two Conductor, 5/16" Dia. O.D., Alloy 825, 600 Volts

Cable Number	Ohms/ft	Maximum Exposure Temperature Rating °F	Resistance Curve
588B	0.0071	600	1
614B	0.0149		1
627B	0.027		2
640B	0.040		3
670B	0.065	1100	N/A
710B	0.104		
715B	0.162		
720B	0.205		
732B	0.325		
750B	0.500		
774B	0.735		
810B	1.62		
819B	1.87		
830B	2.97		
840B	4.30		
859B	5.98		

One Conductor, 3/16" Dia. O.D., Alloy 825, 600 Volts

Cable Number	Ohms/ft	Maximum Exposure Temperature Rating °F	Resistance Curve
145K	0.0046	600	1
189K	0.0090		2
216K	0.0165		3
239K	0.069	1100	N/A
250K	0.050		
279K	0.079		
310K	0.095		
316K	0.157		
326K	0.260		
333K	0.330		
346K	0.457		
372K	0.730		
412K	1.17		
415K	1.48		
423K	2.36		
430K	2.80		
447K	4.50		

MI

Mineral Insulated High Temperature *(cont'd.)*

Specification / Application Information

Graph-1
Cable Sheath Temperature Rise

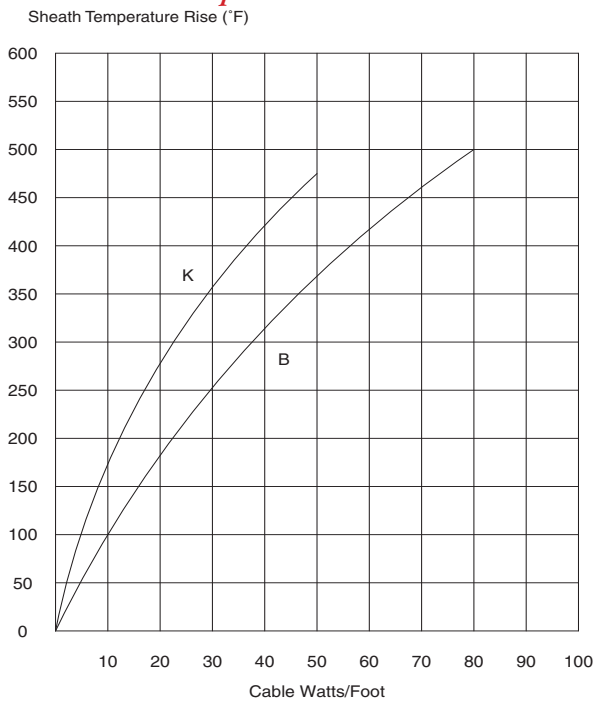

Graph-2
Cable Resistance Temperature Multiplier

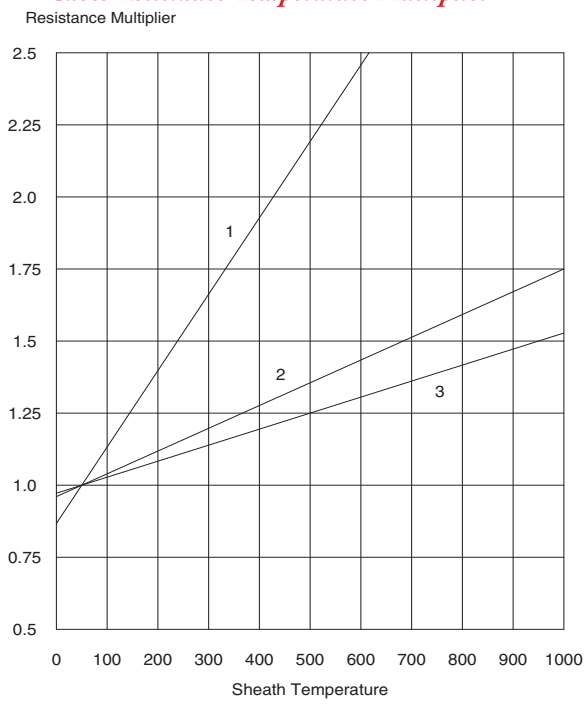

Graph-3
Maximum Wattages - All Cables
With Hot/Cold Junction Under Insulation

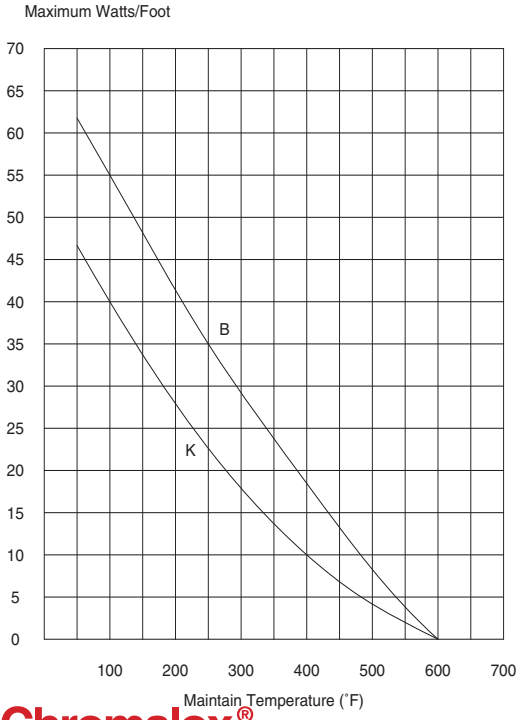

Graph-4
Maximum Wattages -
All 1100˚F Maximum Temperature
Cables With Hot/Cold Junction Under Insulation

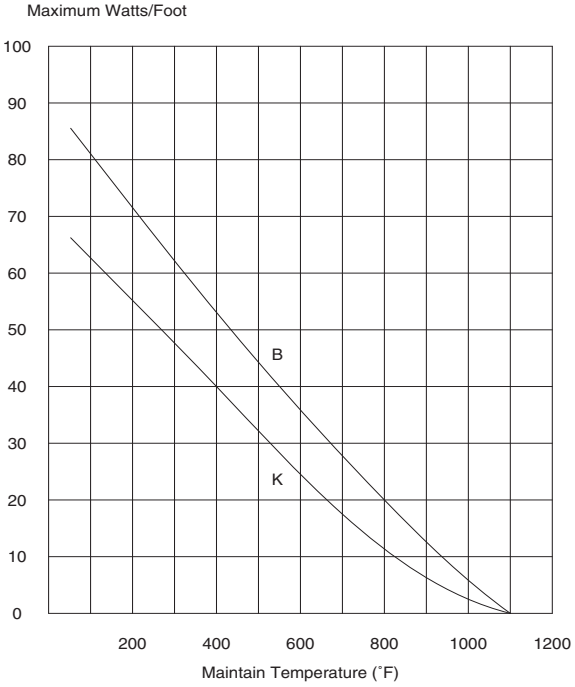

HSRL

Self-Regulating Low Temperature

- **Self- Regulating, Energy Efficient**
- **16 AWG Buss Wire**
- **Circuit Lengths to 660 Feet**
- **Process Temperature Maintenance to 150°F (65°F)**
- **Maximum Continuous Exposure Temperature, Power Off, 185°F (85°F)**
- **Freeze Protection of Fire Protection System Piping**
- **Available in 3, 5, 8, and 10 Watts per Foot**
- **120 and 208-277 Volts Available**
- **Division 1 Hazardous Locations**
- **Approximate Size 3/8"W x 1/8"H**
- **Minimum Bend Radius 1-1/8"**
- **For Use on Metal & Plastic Pipes**

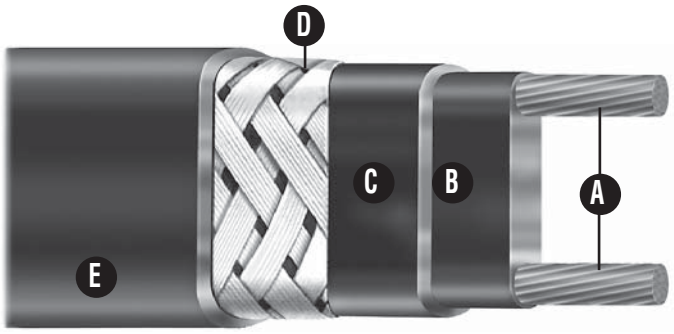

Description

Chromalox HSRL self-regulating heating cable provides safe, reliable heat tracing for freeze protection of pipes, valves, tanks and similar applications. Constructed of industrial grade 16 AWG buss wire with a tinned copper braid and fluoropolymer overjacket, HSRL ensures operating integrity in Div. 1 hazardous environments. HSRL heating cable has a maximum maintenance temperature rating of 150°F (65°F) and a maximum exposure temperature of 185˚F (85˚C)

Note: Due to the nature of Division 1 hazardous location applications consultation with a factory representative is required.

Features

- Energy efficient, self-regulating HSRL uses less energy when less heat is required.
- Easy to install, HSRL can be cut to any length (up to max circuit length) in the field.
- HSRL features lower installed cost than steam tracing, less maintenance expense and less down time.
- HSRL can be single overlapped without burnout, which simplifies heat tracing of in-line process equipment such as valves, elbows and pumps.
- Chromalox HL Connection Kits reduce installation time.

Construction

A **Twin 16 AWG Copper Buss Wires—** Provide reliable electric current capability.

B **Semiconductive Polymer Core Matrix—** "Self-Regulating" component of the cable its electrical resistance varies with temperature. As process temperature drops, the core's heat output increases; as process temperature rises, the heat output decreases.

C **Polyolefin Jacket—** Flame retardant, electrically insulates the matrix and buss wires and provides resistance to water and some inorganic chemical solutions.

D **Tinned Copper Braid—** Provides additional mechanical protection in any environment and a positive ground path.

E **High Temperature Fluoropolymer Overjacket—** Corrosion resistant, flame retardant overjacket is highly effective in many environments. Protects against exposure to organic or corrosive solutions. The overjacket also protects against abrasion and impact damage.

Approvals

FM Approved
- UL Listed for freeze protection of fire system piping
- Class I, Division 1, Groups B, C, D
- Class II, Division 1, Groups E, F, G
- Class III, Division 1
- 3 Watt rated T6 temperature class
- 5 and 8 Watt rated T5 temperature class
- 10 Watt rated T4A temperature class

CSA Approved
- Class I, Division 1, Groups B, C, D
- Class II, Division 1, Groups E, F, G
- 3 Watt rated T6 temperature class
- 5 and 8 Watt rated T5 temperature class
- 10 Watt rated T4A temperature class

HSRL

Self-Regulating Low Temperature *(cont'd.)*

Thermal Output Ratings on Insulated Metal Pipe[1]

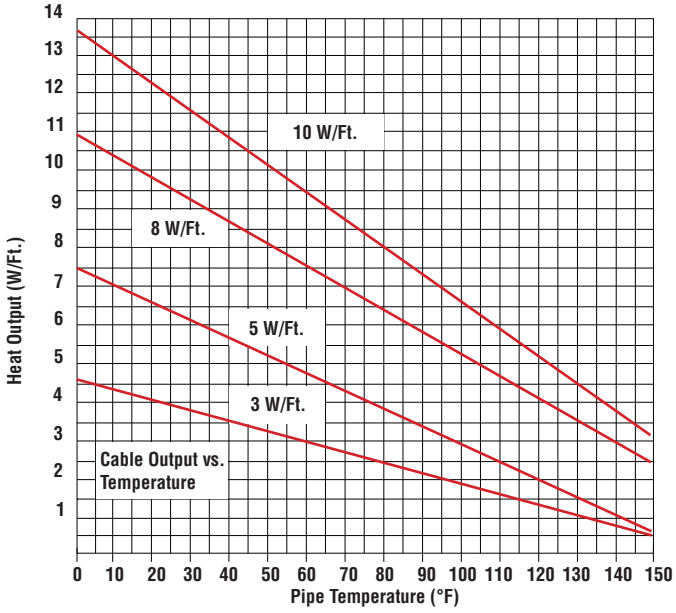

Note 1 — *Thermal output is determined per IEEE 515-1997 Standard for testing, design, installation, and maintenance of electrical resistance heat tracing section 4.1.11 Method C.*

Output Wattage at Alternate Voltages (W/Ft.)

Model	208V	% Change In Output	220V	% Change In Output	277V	% Change In Output
HSRL 3	2.4	-20	2.6	-13	3.4	+15
HSRL 5	4.1	-18	4.5	-10	5.6	+13
HSRL 8	6.88	-14	7.28	-9	8.96	+12
HSRL 10	8.7	-13	9.2	-8	11.1	+10

Circuit Breaker Selection (Max. Circuit Lengths in Ft.)

Cable Rating	50°F Start-Up (Ft.)						0°F Start-Up (Ft.)						-20°F Start-Up (Ft.)					
	10A	15A	20A	25A	30A	40A	10A	15A	20A	25A	30A	40A	10A	15A	20A	25A	30A	40A
HSRL3-1CT	205	305	360	NR	NR	NR	135	200	270	330	360	NR	120	185	245	300	360	NR
HSRL3-2CT	400	600	660	NR	NR	NR	275	415	555	660	NR	NR	245	370	495	600	660	NR
HSRL5-1CT	125	185	250	270	NR	NR	90	135	180	225	270	NR	80	120	160	205	245	270
HSRL5-2CT	250	375	505	540	NR	NR	180	270	360	450	540	NR	160	245	325	405	490	540
HSRL8-1CT	100	150	200	215	NR	NR	70	110	145	180	215	NR	65	100	130	165	200	210
HSRL8-2CT	185	285	375	420	NR	NR	135	200	265	335	395	420	120	175	235	300	350	420
HSRL10-1CT	60	95	130	160	180	NR	50	80	105	130	155	180	45	70	95	120	140	180
HSRL10-2CT	100	160	210	260	315	360	80	125	170	210	255	340	75	120	160	195	240	320

NR = Not Required. Maximum circuit length has been reached in a smaller breaker size.

HSRL
Self-Regulating Low Temperature *(cont'd.)*

Ordering Information

Output (W/Ft.)	Volts	Model	Stock	PCN	Wt./1000' (Lbs.)
3 @ 50°F	120	**HSRL 3-1CT**	**S**	**382070**	66
	208 - 277	**HSRL 3-2CT**	**S**	**382061**	66
5 @ 50°F	120	**HSRL 5-1CT**	**S**	**382053**	66
	208 - 277	**HSRL 5-2CT**	**S**	**382045**	66
8 @ 50°F	120	**HSRL 8-1CT**	**S**	**382037**	66
	208 - 277	**HSRL 8-2CT**	**S**	**382029**	66
10 @ 50°F	120	**HSRL 10-1CT**	**S**	**382010**	66
	208 - 277	**HSRL 10-2CT**	**S**	**382022**	66

To Order — Specify length, model, PCN and installation accessories.

Accessories

Description		Model
Power Connection	Heat trace to electrical service connection	HL-PC
T- Splice	Electrical connection for 3 cables	HL-T
In-Line Splice	Electrical connection for 2 cables	HL-S
End Seal	For terminating cable	HL-ES
Thermostat	Ambient air sensing thermostat	B-121
	Line sensing mechanical thermostat	E-121
		E-122
		E-122P

To Order — Please refer to HL Connection Accessories page G-43

Ordering Information

To Order — *Complete the Model Number using the Matrix provided.*

Model	Hazardous Location Self-Regulating Low Temperature
HSRL	Self-Regulating, Low Temperature Heating Cable

Code	Output (W/Ft.)
3	Three
5	Five
8	Eight
10	Ten

Code	Voltage
1	120
2	240

Code	Standard Braid & Overjacket
CT	Tinned copper metallic braid for ground path fluoropolymer corrosion resistant overjacket. Specifically tested for Division I environments.

HSRL	**3**	**1**	**CT**	**Typical Model Number**

Note 1 — Note: Due to the nature of Division 1 hazardous location applications consultation with a factory representative is required.

HSRM

Self-Regulating Medium Temperature

- **Self- Regulating, Energy Efficient**
- **14 AWG Buss Wire**
- **Circuit Lengths to 780 Feet**
- **Process Temperature Maintenance to 302°F (150°C)**
- **Maximum Continuous Exposure Temperature, Power Off, 420°F (215°C)**
- **Freeze Protection of Fire Protection System Piping**
- **Available in 5, 8, 10, 15 and 20 Watts per Foot**
- **120 and 208-277 Volts Available**
- **Division 1 Hazardous Locations**
- **Approximate Size 1/2"W x 1/4"H**
- **Minimum Bend Radius 1-1/2"**
- **For Use on Metallic Pipes Only**

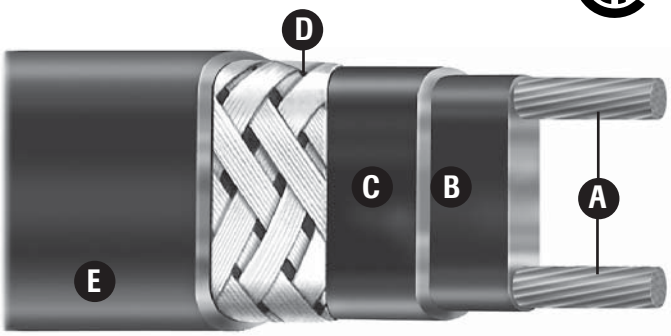

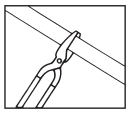
Cut to Length in Field

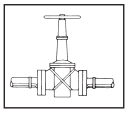
Can be Overlapped

Medium Temperature

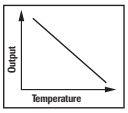

Self Regulating Output

Description

Chromalox HSRM self-regulating heating cable provides safe, reliable heat tracing for freeze protection of pipes, valves, tanks and similar applications. Constructed of industrial grade 14 AWG buss wire with a tinned copper braid and fluoropolymer overjacket, HSRM ensures operating integrity in Div. 1 hazardous environments. HSRM heating cable has a maximum maintenance temperature rating of 302°F (150°C) and a maximum exposure temperature of 420˚F (215˚C).

Note: Due to the nature of Division 1 hazardous location applications consultation with a factory representative is required.

Features

- Energy efficient, self-regulating HSRM uses less energy when less heat is required.
- Easy to install, HSRM can be cut to any length (up to max circuit length) in the field.
- HSRM features lower installed cost than steam tracing, less maintenance expense and less down time.
- HSRM can be single overlapped without burnout, which simplifies heat tracing of in-line process equipment such as valves, elbows and pumps.
- Chromalox HL Connection Kits reduce installation time.

Construction

A Twin 14 AWG Copper Buss Wires—Provide reliable electric current capability.

B Semiconductive Polymer Core Matrix— "Self-Regulating" component of the cable its electrical resistance varies with temperature. As process temperature drops, the core's heat output increases; as process temperature rises, the heat output decreases.

C Fluoropolymer Jacket— Flame retardant electrically insulates the matrix and provides corrosion resistance.

D Tinned Copper Braid— Provides additional mechanical protection in any environment and a positive ground path.

E High Temperature Fluoropolymer Overjacket— Corrosion resistant, flame retardant overjacket is highly effective in many environments. Protects against exposure to organic or corrosive solutions. The overjacket also protects against abrasion and impact damage.

Approvals

FM Approved
- UL Listed for freeze protection of fire system piping
- Class I, Division 1, Groups B, C, D
- Class II, Division 1, Groups E, F, G
- Class III, Division 1
- 5 and 8 Watt rated T3C Temperature Class
- 10 Watt rated T3A Temperature Class
- 15 and 20 Watt rated T2C Temperature Class

CSA Approved
- Class I, Division 1, Groups B, C, D
- Class II, Division 1, Groups E, F, G
- 5 and 8 Watt rated T3C Temperature Class
- 10 Watt rated T3A Temperature Class
- 15 and 20 Watt rated T2C Temperature Class

HSRM
Self-Regulating Medium Temperature *(cont'd.)*

Thermal Output Ratings on Insulated Metal Pipe[1]

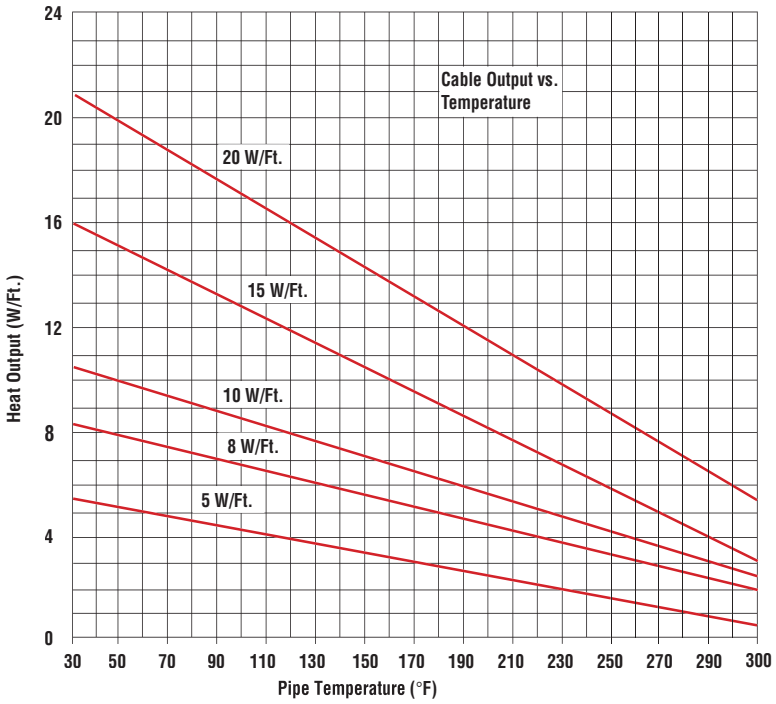

Note 1 — Thermal output is determined per IEEE 515-1997 Standard for testing, design, installation, and maintenance of electrical resistance heat tracing section 4.1.11 Method C.

Output Wattage at Alternate Voltages (W/Ft.)

Model	208V	% Change In Output	220V	% Change In Output	277V	% Change In Output
HSRM 5	3.85	-23	4.25	-15	6.45	+23
HSRM 8	6.4	-20	6.88	-14	10.24	+22
HSRM 10	8.3	-17	8.80	-12	12.50	+20
HSRM 15	12.75	-15	13.50	-10	18.45	+19
HSRM 20	17.6	-12	18.40	-8	24.40	+19

Circuit Breaker Selection (Max. Circuit Lengths in Ft.)

Cable Rating	50°F Start-Up (Ft.)					0°F Start-Up (Ft.)					-20°F Start-Up (Ft.)				
	15A	20A	30A	40A	50A	15A	20A	30A	40A	50A	15A	20A	30A	40A	50A
HSRM 5-1	180	240	360	375	NA	165	220	330	375	NA	155	210	310	375	NA
HSRM 5-2	360	480	720	750	NA	325	430	645	750	NA	310	415	620	750	NA
HSRM 8-1	145	190	285	325	NA	135	175	265	325	NA	130	165	250	325	NA
HSRM 8-2	285	380	575	650	NA	255	345	520	650	NA	245	335	490	650	NA
HSRM 10-1	95	125	190	250	NA	90	110	175	250	NA	85	100	170	245	250
HSRM 10-2	190	255	385	490	NA	165	225	345	490	NA	155	215	330	470	490
HSRM 15-1	70	95	145	190	210	65	85	125	165	210	60	80	120	150	210
HSRM 15-2	145	190	290	385	420	120	175	270	360	420	115	165	260	340	420
HSRM 20-1	60	75	115	155	160	50	65	105	140	160	45	65	100	135	160
HSRM 20-1	115	155	230	305	350	100	135	200	270	350	90	130	195	255	335

NR = Not Required. Maximum circuit length has been reached in a smaller breaker size.

HSRM
Self-Regulating Medium Temperature *(cont'd.)*

Ordering Information

Output (W/Ft.)	Volts	Model	Stock	PCN	Wt./1000' (Lbs.)
5 @ 50°F	120	**HSRM5-1CT**	**S**	**382176**	80
	208 - 277	**HSRM5-2CT**	**S**	**382168**	80
8 @ 50°F	120	**HSRM8-1CT**	**S**	**382150**	80
	208 - 277	**HSRM8-2CT**	**S**	**382141**	80
10 @ 50°F	120	**HSRM10-1CT**	**S**	**382133**	80
	208 - 277	**HSRM10-2CT**	**S**	**382125**	80
15 @ 50°F	120	**HSRM15-1CT**	**S**	**382117**	80
	208 - 277	**HSRM15-2CT**	**S**	**382109**	80
20 @ 50°F	120	**HSRM20-1CT**	**S**	**382096**	80
	208 - 277	**HSRM20-2CT**	**S**	**382088**	80

To Order — Specify length, model, PCN and installation accessories.

Accessories

	Description	Model
Power Connection	Heat trace to electrical service connection	HL-PC
T- Splice	Electrical connection for 3 circuits	HL-T
In-Line Splice	Electrical connection for 2 circuits	HL-S
End Seal	For terminating cable	HL-ES
Thermostat	Ambient air sensing thermostat	B-121
	Line sensing mechanical thermostat	E-121
		E-122
		E-122P

To Order — Please refer to HL Connection Accessories page G-43

Ordering Information

To Order — Complete the Model Number using the Matrix provided.

Note — Due to the nature of Division 1 hazardous location applications consultation with a factory representative is required.

Model	Hazardous Location Self-Regulating Medium Temperature
HSRM	Self-Regulating, Medium Temperature Heating Cable

Code	Output (W/Ft.)
5	Five
8	Eight
10	Ten
15	Fifteen
20	Twenty

Code	Voltage
1	120
2	240

Code	Standard Braid & Overcoat Options
CT	Tinned copper braid for ground path fluoropolymer overjacket specifically tested for Division I environments

HSRM	**8**	**1**	**CT**	**Typical Model Number**

SRF
Self-Regulating Freeze Protection

- **Self-Regulating, Energy Efficient**
- **Designed for Freeze Protection**
- **Max. Exposure Temp. 185°F**
- **Cost Effective for Commercial Construction Freeze Protection Applications**
- **Freeze Protection of Fire Protection System Piping**
- **Industrial Grade, 16 AWG Buss Wire**
- **Standard Braid and Optional Overjacket**
- **Continuous Exposure Temperature, Power Off, 185°F (85°C)**
- **Circuit Lengths, Up to 660 Ft.**
- **3, 5 and 8 W/Ft.**
- **120, 208 - 277 Volt From Stock**
- **Approximate Size 3/8"W x 1/8"H**
- **Minimum Bend Radius 1-1/8"**
- **For Use on Metal and Plastic Pipes**

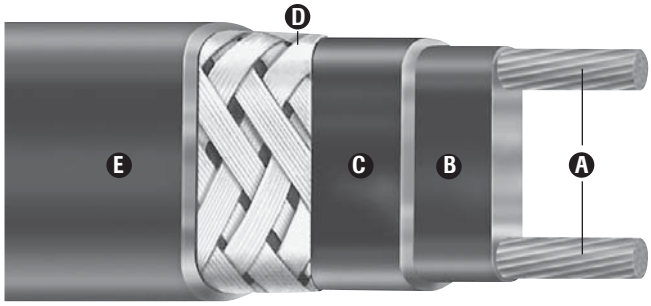

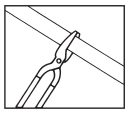

Cut to Length in Field

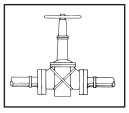

Can be Single Overlapped

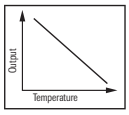

Self Regulating Output

Description

Chromalox SRF cable is ideal for keeping metal and plastic pipes warm in commercial construction, institutional buildings and some industrial freeze protection applications. SRF cable is constructed of a self-regulating polymer core that varies its output along its entire length, saving energy and eliminating hot spots along the pipe. Parallel construction makes it easier to install than zone or series types of cable since it can be cut-to-length at any point on the pipe. It can be single overlapped without overheating the cable.

Features

- Energy efficient, self-regulating SRF uses less energy when less heat is required.
- Easy to install, SRF can be cut to any length (up to max. circuit length) in the field.
- Field splices can be performed easily in minutes with no scrap or wasted cold sections.
- SRF can be single overlapped without burn-out, which simplifies heat tracing of in-line process equipment such as valves, elbows and pumps.
- Because SRF is self-regulating, over-temperature conditions are minimized.
- Chromalox termination, splice, tee and end seal kits reduce installation time.

Construction

A **Twin 16 AWG Copper Buss Wires —** Provide high electrical current capability.

B **Semiconductive Polymer Core Matrix —** its electrical resistance varies with temperature. As process temperature drops, the core's heat output increases; conversely, as process temperature rises, the heat output decreases.

C **Polyolefin Jacket —** Flame retardant, electrically insulates the matrix and buss wires. Also provides resistance to water and some inorganic chemical solutions.

D **Tinned Copper Braid —** The braid covering the jacket provides additional mechanical protection in any environment and a positive ground path.

E **High Temperature TPR Overjacket (optional) —** The TPR overcoat protects the braid and provides resistance to certain inorganic chemical solutions.

Approvals

UL Listed for ordinary areas.

UL Listed for fire protection system piping

CSA Certified for ordinary areas.

FM Approved for ordinary areas.

SRF

Application & Selection Guidelines

Commercial Freeze Protection SRF Cable Selection Charts

These charts are designed to speed selection of the appropriate wattage of cable when used for freeze protection. Find the diameter of pipe below and cross reference with the expected minimum ambient temperature for the recommended cable.

- Selections suitable for 120 and 208 to 277V applications.
- Design based on straight runs of cable or pipe. Spiralling is not required.
- Heat loss is based on 40°F maintenance temperature and Fiberglas® insulation k = 0.25 at 50°F.
- Non-metallic pipe heat losses are based on using Chromalox AT-1 aluminum tape for improving heat transfer.
- Only 3 W/Ft. rating is UL Listed for non-metallic pipe applications, however, 5W/Ft. and 8 W/Ft. can be used.

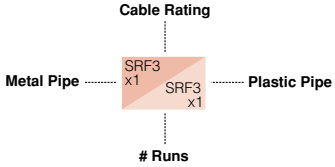

Each block specifies cable rating and # of runs for metal pipe (dark) and plastic pipe (light).

For larger pipe sizes, refer to the Technical section in the back of this catalog or contact your Local Chromalox Sales office.

0.50" Pipe

Min. Ambient Temp.

Insulation Thickness (In.)	0°	-10°	-20°	-30°	-40°
0.5	SRF3 x1 / SRF3 x1	SRF3 x1 / SRF3 x1	SRF3 x1 / SRF3 x1	SRF5 x1 / SRF5 x1	SRF5 x1 / SRF5 x1
1.0	SRF3 x1 / SRF3 x1	SRF3 x1 / SRF3 x1	SRF3 x1 / SRF3 x1	SRF3 x1 / SRF3 x1	SRF3 x1 / SRF3 x1
1.5	SRF3 x1 / SRF3 x1	SRF3 x1 / SRF3 x1	SRF3 x1 / SRF3 x1	SRF3 x1 / SRF3 x1	SRF3 x1 / SRF3 x1
2.0	SRF3 x1 / SRF3 x1	SRF3 x1 / SRF3 x1	SRF3 x1 / SRF3 x1	SRF3 x1 / SRF3 x1	SRF3 x1 / SRF3 x1
3.0	SRF3 x1 / SRF3 x1	SRF3 x1 / SRF3 x1	SRF3 x1 / SRF3 x1	SRF3 x1 / SRF3 x1	SRF3 x1 / SRF3 x1

1.00" Pipe

Min. Ambient Temp.

Insulation Thickness (In.)	0°	-10°	-20°	-30°	-40°
0.5	SRF3 x1 / SRF5 x1	SRF5 x1 / SRF5 x1	SRF5 x1 / SRF5 x1	SRF5 x1 / SRF8 x1	SRF8 x1 / SRF8 x1
1.0	SRF3 x1 / SRF3 x1	SRF3 x1 / SRF3 x1	SRF3 x1 / SRF3 x1	SRF5 x1 / SRF5 x1	SRF5 x1 / SRF5 x1
1.5	SRF3 x1 / SRF3 x1	SRF3 x1 / SRF3 x1	SRF3 x1 / SRF3 x1	SRF3 x1 / SRF3 x1	SRF3 x1 / SRF5 x1
2.0	SRF3 x1 / SRF3 x1	SRF3 x1 / SRF3 x1	SRF3 x1 / SRF3 x1	SRF3 x1 / SRF3 x1	SRF3 x1 / SRF3 x1
3.0	SRF3 x1 / SRF3 x1	SRF3 x1 / SRF3 x1	SRF3 x1 / SRF3 x1	SRF3 x1 / SRF3 x1	SRF3 x1 / SRF3 x1

2.00" Pipe

Min. Ambient Temp.

Insulation Thickness (In.)	0°	-10°	-20°	-30°	-40°
0.5	SRF5 x1 / SRF8 x1	SRF8 x1 / SRF8 x1	SRF8 x1 / SRF8 x1	SRF8 x1 / SRF5 x2	SRF5 x2 / SRF8 x2
1.0	SRF3 x1 / SRF5 x1	SRF5 x1 / SRF5 x1	SRF3 x1 / SRF5 x1	SRF5 x1 / SRF8 x1	SRF8 x1 / SRF8 x1
1.5	SRF3 x1 / SRF3 x1	SRF3 x1 / SRF3 x1	SRF3 x1 / SRF5 x1	SRF5 x1 / SRF5 x1	SRF5 x1 / SRF5 x1
2.0	SRF3 x1 / SRF3 x1	SRF5 x1 / SRF3 x1	SRF3 x1 / SRF3 x1	SRF3 x1 / SRF5 x1	SRF5 x1 / SRF5 x1
3.0	SRF3 x1 / SRF3 x1	SRF3 x1 / SRF3 x1	SRF3 x1 / SRF3 x1	SRF3 x1 / SRF3 x1	SRF3 x1 / SRF5 x1

3.00" Pipe

Min. Ambient Temp.

Insulation Thickness (In.)	0°	-10°	-20°	-30°	-40°
0.5	SRF8 x1 / SRF8 x1	SRF8 x1 / SRF5 x2	SRF5 x2 / SRF8 x2	SRF5 x2 / SRF8 x2	SRF5 x2 / SRF8 x2
1.0	SRF5 x1 / SRF5 x1	SRF5 x1 / SRF8 x1	SRF5 x1 / SRF8 x1	SRF8 x1 / SRF8 x1	SRF8 x1 / SRF8 x1
1.5	SRF3 x1 / SRF5 x1	SRF3 x1 / SRF5 x1	SRF5 x1 / SRF5 x1	SRF5 x1 / SRF8 x1	SRF5 x1 / SRF8 x1
2.0	SRF3 x1 / SRF3 x1	SRF3 x1 / SRF5 x1	SRF3 x1 / SRF5 x1	SRF5 x1 / SRF5 x1	SRF5 x1 / SRF5 x1
3.0	SRF3 x1 / SRF3 x1	SRF3 x1 / SRF3 x1	SRF3 x1 / SRF3 x1	SRF3 x1 / SRF5 x1	SRF5 x1 / SRF5 x1

4.00" Pipe

Min. Ambient Temp.

Insulation Thickness (In.)	0°	-10°	-20°	-30°	-40°
0.5	SRF8 x1 / SRF5 x2	SRF5 x2 / SRF8 x2	SRF8 x2 / SRF8 x2	SRF8 x2 / SRF8 x2	SRF5 x3 / SRF8 x3
1.0	SRF5 x1 / SRF8 x1	SRF8 x1 / SRF8 x1	SRF8 x1 / SRF8 x1	SRF8 x1 / SRF5 x2	SRF5 x2 / SRF8 x2
1.5	SRF3 x1 / SRF5 x1	SRF3 x1 / SRF5 x1	SRF5 x1 / SRF8 x1	SRF8 x1 / SRF8 x1	SRF8 x1 / SRF8 x1
2.0	SRF3 x1 / SRF5 x1	SRF3 x1 / SRF5 x1	SRF5 x1 / SRF5 x1	SRF5 x1 / SRF8 x1	SRF5 x1 / SRF8 x1
3.0	SRF3 x1 / SRF3 x1	SRF3 x1 / SRF3 x1	SRF3 x1 / SRF5 x1	SRF5 x1 / SRF5 x1	SRF5 x1 / SRF5 x1

5.00" Pipe

Min. Ambient Temp.

Insulation Thickness (In.)	0°	-10°	-20°	-30°	-40°
0.5	SRF5 x2 / SRF8 x2	SRF8 x2 / SRF8 x2	SRF8 x2 / SRF8 x3	SRF8 x3 / SRF8 x3	SRF8 x3 / SRF8 x3
1.0	SRF8 x1 / SRF8 x1	SRF8 x1 / SRF8 x1	SRF8 x1 / SRF5 x2	SRF5 x2 / SRF8 x2	SRF5 x2 / SRF8 x2
1.5	SRF5 x1 / SRF5 x1	SRF5 x1 / SRF8 x1	SRF8 x1 / SRF8 x1	SRF8 x1 / SRF8 x1	SRF8 x1 / SRF5 x2
2.0	SRF3 x1 / SRF5 x1	SRF3 x1 / SRF5 x1	SRF5 x1 / SRF8 x1	SRF8 x1 / SRF8 x1	SRF8 x1 / SRF8 x1
3.0	SRF3 x1 / SRF3 x1	SRF3 x1 / SRF5 x1	SRF5 x1 / SRF5 x1	SRF5 x1 / SRF5 x1	SRF5 x1 / SRF8 x1

SRF

Application & Selection Guidelines *(cont'd.)*

6.00" Pipe

Min. Ambient Temp.

Insulation Thickness (In.)	0°	-10°	-20°	-30°	-40°
0.5	SRF8 x2 / SRF8 x2	SRF8 x2 / SRF8 x3	SRF8 x3 / SRF8 x3	SRF8 x3 / SRF8 x3	SRF8 x3 / SRF8 x4
1.0	SRF8 x1 / SRF8 x1	SRF8 x1 / SRF5 x2	SRF5 x2 / SRF8 x2	SRF5 x2 / SRF8 x2	SRF8 x2 / SRF8 x2
1.5	SRF5 x1 / SRF8 x1	SRF5 x1 / SRF8 x1	SRF8 x1 / SRF8 x1	SRF8 x1 / SRF5 x2	SRF5 x2 / SRF8 x2
2.0	SRF5 x1 / SRF5 x1	SRF5 x1 / SRF8 x1	SRF5 x1 / SRF8 x1	SRF8 x1 / SRF8 x1	SRF8 x1 / SRF8 x1
3.0	SRF3 x1 / SRF5 x1	SRF3 x1 / SRF5 x1	SRF5 x1 / SRF5 x1	SRF5 x1 / SRF8 x1	SRF8 x1 / SRF8 x1

8.00" Pipe

Min. Ambient Temp.

Insulation Thickness (In.)	0°	-10°	-20°	-30°	-40°
1.0	SRF8 x1 / SRF5 x2	SRF5 x2 / SRF8 x2	SRF8 x2 / SRF8 x2	SRF8 x2 / SRF8 x2	SRF8 x2 / SRF8 x3
1.5	SRF5 x1 / SRF8 x1	SRF8 x1 / SRF8 x1	SRF8 x1 / SRF5 x2	SRF5 x2 / SRF8 x2	SRF5 x2 / SRF8 x2
2.0	SRF5 x1 / SRF8 x1	SRF5 x1 / SRF8 x1	SRF8 x1 / SRF8 x1	SRF8 x1 / SRF5 x2	SRF8 x2 / SRF8 x2
3.0	SRF5 x1 / SRF5 x1	SRF5 x1 / SRF5 x1	SRF5 x1 / SRF8 x1	SRF5 x1 / SRF8 x1	SRF8 x1 / SRF8 x1

10.00" Pipe

Min. Ambient Temp.

Insulation Thickness (In.)	0°	-10°	-20°	-30°	-40°
1.0	SRF5 x2 / SRF8 x2	SRF8 x2 / SRF8 x2	SRF8 x2 / SRF8 x3	SRF8 x2 / SRF8 x3	SRF8 x3 / SRF8 x3
1.5	SRF8 x1 / SRF8 x1	SRF8 x1 / SRF5 x2	SRF5 x2 / SRF8 x2	SRF8 x2 / SRF8 x2	SRF8 x2 / SRF8 x2
2.0	SRF5 x1 / SRF8 x1	SRF8 x1 / SRF8 x1	SRF8 x1 / SRF5 x2	SRF5 x2 / SRF8 x2	SRF5 x2 / SRF8 x2
3.0	SRF5 x1 / SRF5 x1	SRF5 x1 / SRF8 x1	SRF5 x1 / SRF8 x1	SRF8 x1 / SRF8 x1	SRF8 x1 / SRF5 x2

12.00" Pipe

Min. Ambient Temp.

Insulation Thickness (In.)	0°	-10°	-20°	-30°	-40°
1.0	SRF8 x2 / SRF8 x2	SRF8 x2 / SRF8 x3	SRF8 x2 / SRF8 x3	SRF8 x3 / SRF8 x3	SRF8 x3 / SRF8 x4
1.5	SRF8 x1 / SRF5 x2	SRF5 x2 / SRF8 x2	SRF5 x2 / SRF8 x2	SRF8 x2 / SRF8 x2	SRF8 x2 / SRF8 x3
2.0	SRF8 x1 / SRF8 x1	SRF8 x1 / SRF5 x2	SRF5 x2 / SRF8 x2	SRF5 x2 / SRF8 x2	SRF8 x2 / SRF8 x2
3.0	SRF5 x1 / SRF8 x1	SRF5 x1 / SRF8 x1	SRF8 x1 / SRF8 x1	SRF8 x1 / SRF5 x2	SRF8 x1 / SRF8 x2

14.00" Pipe

Min. Ambient Temp.

Insulation Thickness (In.)	0°	-10°	-20°	-30°	-40°
1.0	SRF8 x2 / SRF8 x2	SRF8 x2 / SRF8 x3	SRF8 x3 / SRF8 x3	SRF8 x3 / SRF8 x4	SRF8 x3 / SRF8 x4
1.5	SRF8 x1 / SRF8 x2	SRF5 x2 / SRF8 x2	SRF5 x2 / SRF8 x2	SRF8 x2 / SRF8 x3	SRF8 x2 / SRF8 x3
2.0	SRF8 x1 / SRF5 x2	SRF8 x1 / SRF8 x2	SRF5 x2 / SRF8 x2	SRF5 x2 / SRF8 x2	SRF8 x2 / SRF8 x3
3.0	SRF5 x1 / SRF8 x1	SRF8 x1 / SRF8 x1	SRF8 x1 / SRF5 x2	SRF8 x1 / SRF8 x2	SRF5 x2 / SRF8 x2

16.00" Pipe

Min. Ambient Temp.

Insulation Thickness (In.)	0°	-10°	-20°	-30°	-40°
1.0	SRF8 x2 / SRF8 x3	SRF8 x3 / SRF8 x3	SRF8 x3 / SRF8 x4	SRF8 x5 / SRF8 x4	SRF8 x4
1.5	SRF5 x2 / SRF8 x2	SRF8 x2 / SRF8 x2	SRF8 x2 / SRF8 x3	SRF8 x2 / SRF8 x3	SRF8 x3 / SRF8 x3
2.0	SRF8 x2 / SRF5 x2	SRF5 x2 / SRF8 x2	SRF5 x2 / SRF8 x2	SRF8 x2 / SRF8 x2	SRF8 x2 / SRF8 x3
3.0	SRF5 x1 / SRF8 x1	SRF8 x1 / SRF8 x1	SRF8 x1 / SRF5 x2	SRF5 x2 / SRF8 x2	SRF5 x2 / SRF8 x2

18.00" Pipe

Min. Ambient Temp.

Insulation Thickness (In.)	0°	-10°	-20°	-30°	-40°
1.0	SRF8 x2 / SRF8 x3	SRF8 x3 / SRF8 x4	SRF8 x3 / SRF8 x4	SRF8 x4	SRF8 x4
1.5	SRF5 x2 / SRF8 x2	SRF8 x2 / SRF8 x3	SRF8 x2 / SRF8 x3	SRF8 x3 / SRF8 x3	SRF8 x3 / SRF8 x4
2.0	SRF8 x1 / SRF8 x2	SRF5 x2 / SRF8 x2	SRF8 x2 / SRF8 x2	SRF8 x2 / SRF8 x3	SRF8 x3 / SRF8 x3
3.0	SRF8 x1 / SRF8 x1	SRF8 x2 / SRF5 x2	SRF8 x1 / SRF8 x2	SRF5 x2 / SRF8 x2	SRF8 x2 / SRF8 x2

20.00" Pipe

Min. Ambient Temp.

Insulation Thickness (In.)	0°	-10°	-20°	-30°	-40°
1.0	SRF8 x3 / SRF8 x3	SRF8 x4 / SRF8 x4	SRF8 x4		
1.5	SRF8 x2 / SRF8 x2	SRF8 x2 / SRF8 x3	SRF8 x3 / SRF8 x3	SRF8 x3 / SRF8 x4	SRF8 x3 / SRF8 x4
2.0	SRF5 x2 / SRF8 x2	SRF5 x2 / SRF8 x2	SRF8 x2 / SRF8 x3	SRF8 x2 / SRF8 x3	SRF8 x3 / SRF8 x3
3.0	SRF8 x1 / SRF8 x1	SRF8 x1 / SRF5 x2	SRF5 x2 / SRF8 x2	SRF8 x2 / SRF8 x2	SRF8 x2 / SRF8 x2

SRF

Self-Regulating Freeze Protection *(cont'd.)*

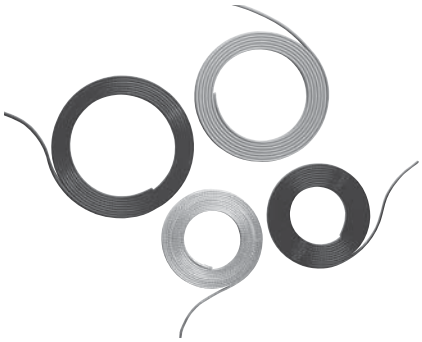

Thermal Output Ratings on Uninsulated Metal Pipes[1]

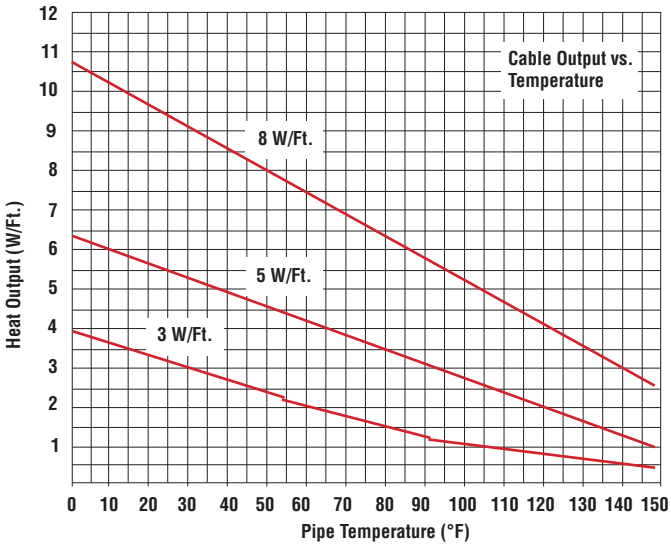

Note 1 — Thermal output is determined per IEEE 515-1997 Standard for testing, design installation, and maintenance of electrical resistance heat tracing section 4.1.11 Method C.

Output Wattage at Alternate Voltages (W/Ft.)

Model	208V	% Change In Output	220V	% Change In Output	277V	% Change In Output
SRF 3	2.4	-20	2.6	-13	3.4	+15
SRF 5	4.1	-18	4.5	-10	5.6	+13
SRF 8	6.88	-14	7.28	-9	8.96	+12

Circuit Breaker Selection (Max. Circuit Lengths in Ft.)

Cable Rating	40°F Start-Up (Ft.)			0°F Start-Up (Ft.)		
	20A	30A	40A	20A	30A	40A
SRF 3-1C	350	360	NR	270	360	NR
SRF 3-2C	660	NR	NR	555	660	NR
SRF 5-1C	230	270	NR	180	270	NR
SRF 5-2C	450	540	NR	360	540	NR
SRF 8-1C	180	215	NR	145	215	NR
SRF 8-2C	330	420	420	265	395	420

NR = Not Required. Maximum circuit length has been reached in a smaller breaker size.

Note — Thermal magnetic circuit breakers are recommended since magnetic circuit breakers could "nuisance trip" at low temperature.

SRF

Self-Regulating Freeze Protection *(cont'd.)*

Ordering Information

Output (W/Ft.)	Volts	Model	Stock	PCN	Wt./1000' (Lbs.)
Output at Rated Voltage					
3 @ 50°F	120 208 - 277	**SRF 3-1C** **SRF 3-2C**	**S** **S**	**386943** **386951**	53 53
5 @ 50°F	120 208 - 277	**SRF 5-1C** **SRF 5-2C**	**S** **S**	**386960** **386978**	53 53
8 @ 50°F	120 208 - 277	**SRF 8-1C** **SRF 8-2C**	**S** **S**	**386986** **386994**	53 53
With Optional Overcoat (CR)					
3 @ 50°F	120 208 - 277	**SRF 3-1CR** **SRF 3-2CR**	**S** **S**	**386100** **386118**	64 64
5 @ 50°F	120 208 - 277	**SRF 5-1CR** **SRF 5-2CR**	**S** **S**	**386142** **386150**	64 64
8 @ 50°F	120 208 - 277	**SRF 8-1CR** **SRF 8-2CR**	**S** **S**	**386062** **386070**	64 64

Accessories

Accessories		U Series	DL	EL
Power Connection	Heat trace to electrical service connection	UPC	RTPC	SSK
Splice & Tee		UMC	RTST	RT-RST
End Seal	For terminating cable	UES	RTES	RT-RES
Thermostat	Ambient air sensing thermostat		RTAS	B-100/B-121
	Line sensing mechanical thermostat		RTBC	E-100/E-121

To Order — General Application & Installation Accessories such as tape, pipe straps, warning labels, etc., refer to the DL & EL General Application Accessories page at the end of this section.

Ordering Information

To Order — *Complete the Model Number using the Matrix provided.*

Model	Self-Regulating Medium Temperature			
SRF	Self-Regulating, Freeze Protection Heating Cable			
	Code	**Output (W/Ft.)**		
	3	Three		
	5	Five		
	8	Eight		
		Code	**Voltage**	
		1	120	
		2	208 - 277	
			Code	**Braid and Overcoat Options**
			C	Standard tinned-copper metallic braid for additional protection and ground path
			CR	TPR overjacket over braid for protection against certain inorganic chemical solutions
SRF	**5**	**1**	**C**	**Typical Model Number**

SRF-RG

Self-Regulating Roof & Gutter

- **Roof and Gutter De-Icing**
- **Fast, Easy Installation**
- **Cut to Length**
- **UL Listed**
- **CSA Certified**
- **Approximate Size 3/8"W x 1/8"H**
- **Minimum Bend Radius 1-1/8"**

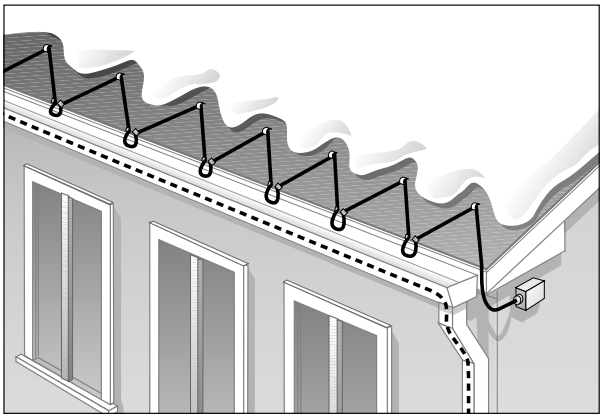

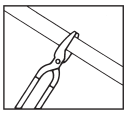

Cut to Length in Field

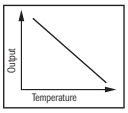

Self Regulating Output

Description

Chromalox SRF-RG self-regulating heating cable provides reliable freeze protection of roofs and gutters. Because SRF-RG is self-regulating, it automatically adjusts to the appropriate heat output as ambient conditions change, making it both energy efficient and cost effective. The protective waterproof outer jacket is suitable for wet applications in downspouts and roof drains.

Likewise, it is easy to apply SRF-RG following the provided instruction sheets and utilizing the required accessory kits. It can be cut-to-length and single overlapped. Simply trace the gutter or roof and energize the cable when precipitation is expected. From that point on, SRF-RG will rapidly increase its output when in contact with snow or ice, providing maximum melting power. When the roof and gutters are clear of snow and ice, the SRF-RG cable will regulate its output and save energy.

Applications

1. To calculate the amount of cable needed, multiply roof edge length to be heat traced by the spacing factor. The spacing factor (feet of cable required per foot of roof edge) is determined by the roof overhang, heating width (A) and heating height (B):

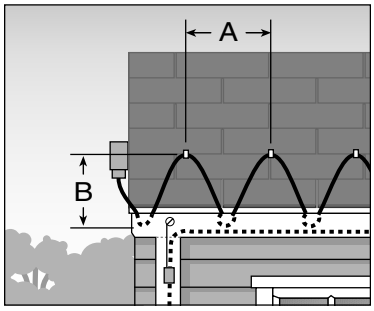

2. Add the total gutter length and the total downspout length to the figure calculated in step 1 to get the total length of cable required.

Roof Overhang (In.)	Heating Width A (Ft.)	Heating Height B (In.)	Spacing Factor
12	2	18	2
24	2	30	3
36	2	42	4

3. Determine how many circuits are required. Divide the total length of cable by the maximum circuit length (see specifications, next page). Round that number up (for example, 2.1 to 3) to get the total number of circuits.

WARNING — A ground fault protection device is required by NEC to minimize the danger of fire if the heating cable is damaged or improperly installed. A minimum trip level of 30mA is recommended to minimize nuisance tripping.

Suggested breakers with 30mA ground fault trip levels are:

- 120V Single Pole Westinghouse GFEPD, Square D QO, EPD Style
- 120/240V Single Pole Westinghouse GFEPD, Square D QO, EPD Style.

SRF-RG
Self-Regulating Roof & Gutter *(cont'd.)*

Specifications

Buss Wire		16 AWG, Nickel-Coated Copper
Ground Braid		Tinned Copper Braid Under Jacket
Outer Jacket		UV Stabilized Weatherproof Jacket
Environmental Use		Use only in Ordinary Areas, 150°F Max. Exposure Temperature
Output Wattage		12 W/Ft. in Snow or Ice @ 32°F
Service Voltage	SRF 5-1RG SRF 5-2RG	120 Vac 208 - 277 Vac

Maximum Circuit Length (Ft.)

	120 Vac			208 - 277 Vac		
Start Up	15A	20A	30A	15A	20A	30A
40°F	185	230	270	375	450	540
0°F	135	180	270	270	360	540

Ordering Information

Product	Use	Model	Stock	PCN	Wt./1000' (Lbs.)
Cable					
120V	Cable with braid and weatherproof jacket	**SRF 5-1RG**	**S**	**386329**	64
208 - 277V	Cable with braid and weatherproof jacket	**SRF 5-2RG**	**S**	**386337**	64
Accessories					
Power Connection Kit	Power termination into junction box with 1 end seal and 2 "Warning-Electric Traced" adhesive labels	**RG-PK-1**	**S**	**386206**	1
Splice Kit	Materials for 1 splice of cable	**RG-SK-1**	**S**	**386214**	1
End Seal Kit	Materials for 1 cable end termination	**RG-EK-1**	**S**	**386257**	1
Roof Clips	To attach cable to standard roofing material, 10 per kit	**RCK-1**	**S**	**340179**	1
Downspout Hangers	To support cable in gutter downspout, 1 pack per carton	**RDK-1**	**S**	**340160**	1
Aluminum Tape	Aluminum foil installation tape with pressure sensitive adhesive, 180 ft. roll. Used to secure cable placement in gutters.	**AT-1**	**S**	**383355**	1

Note — Cables are UL Listed for Snow Melting and De-Icing Equipment.
Thermostats RTAS, RTBC, B100, E100 (See SRL page G-10 for details)

Roof & Gutter Accessories

RG-PK-1 (386206)

Power Connection Kit

Power termination into junction box with one end seal and two "Warning-Electric Traced" labels

RCK-1 & RDK-1

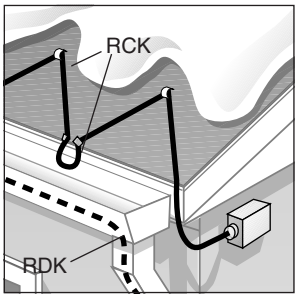

Mounting Kits

RCK-1 (340179)
Roof clips (10) to attach cable

RDK-1 (340160)
Downspout hangers (1) to suspend cable in downspout

RG-SK-1 (386214)

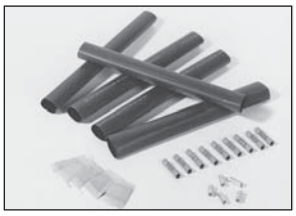

Splice Kit

Materials to make one splice connection. Special weatherproof sleeving to insure trouble-free operation

RG-EK-1 (386257)

End Seal Kit

Seals cable at end termination

Edge-Cutter®
Roof De-Icing System

- **Aluminium Construction**
- **Angled or Flat Surface Designs**
- **Corrosion Resistant Coating Available**

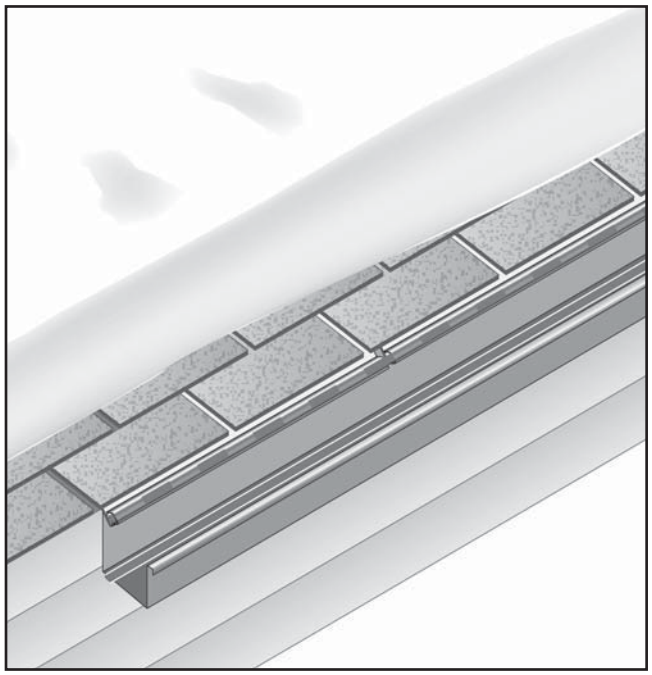

Available Items

Model	PCN	Stock	Wt (Lbs.)
PLD-EC	393967	S	1
PLD-ECF	393975	S	1
Cover-EC	393983	S	1

Description

Edge-Cutter® is an aluminum flashing designed to be used as a heat conductive plate to aid in keeping snow and ice from roof edges. The system is for use only with self-regulating heating cables certified for use in roof and gutter applications.

Edge-Cutter is designed to be applied between the roofing and the roof substrate. It can be used with various roofing products such as asphalt shingles, aluminum, steel* and even slate.

Valleys on a roof may also be heat traced with Edge-Cutter PLD-ECF (Flat Flashing).

Edge-Cutter can be fastened using various methods including screws or adhesives depending on application and building materials.

*Edge-Cutter can be ordered with a 6 mil urethane membrane applied to help prevent galvanic oxidation or corrosion when in contact with dissimilar metals.

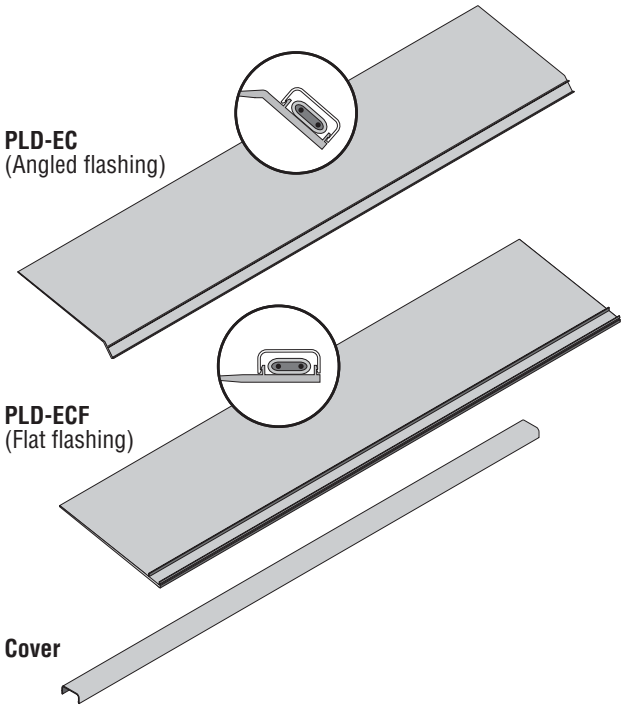

Edge-Cutter®
Roof De-Icing System
(cont'd.)

Valleys can also be heat traced using Edge-Cutter PLD-ECF flat flashing. Dual or single flashing can be used in the valleys

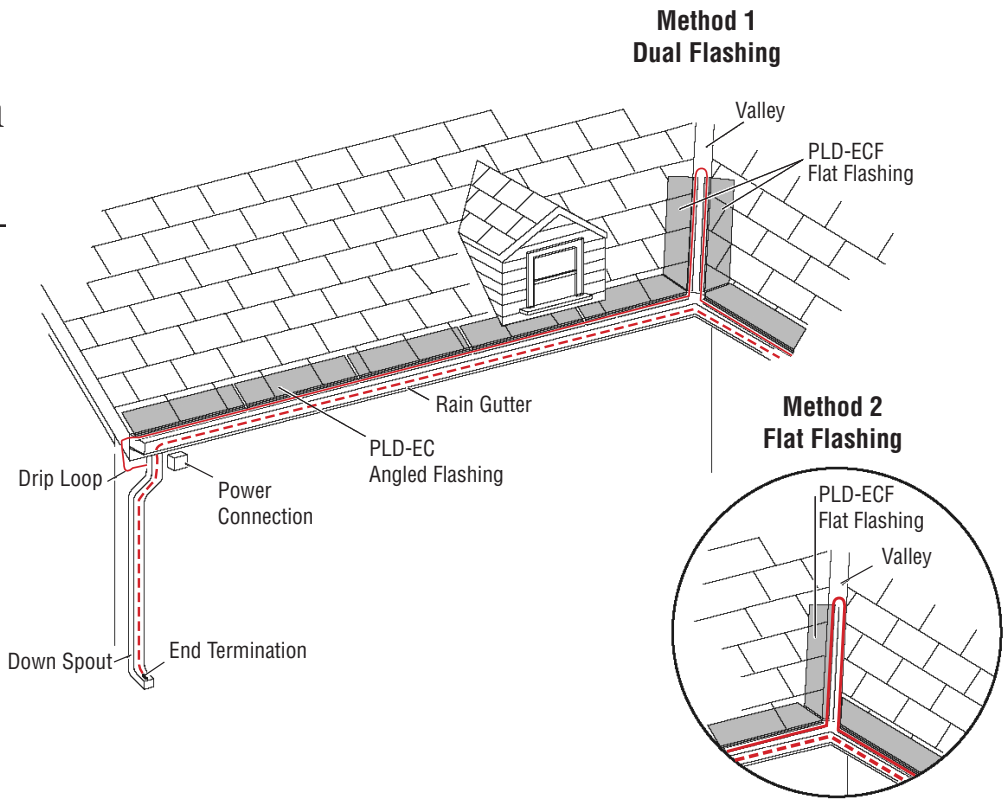

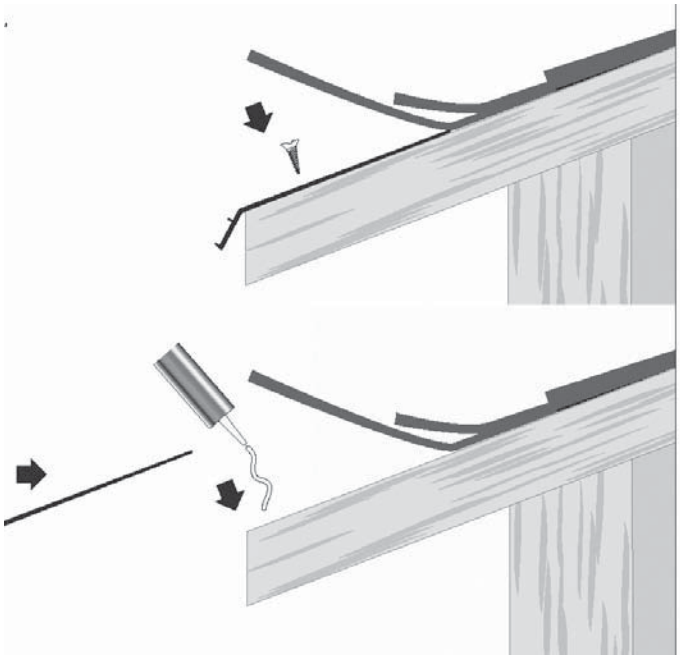

Edge-Cutter flashing can be cut to fit your specific roofing layout. Screws or adhesive can them be used to easily attach the Edge-Cutter system to your roof.

APS-4

Automatic Snow/Ice Melting System Controller

- **Multiple Sensor Capability**
- **Remote Control Option**
- **Controls Up to 10 Satellite Contactors**
- **Timed Heater Cycle Capability**
- **UL Listed, CSA Certified**
- **Single and Three-Phase Power Control**
- **Supply Options: 208, 240, 277 and 480 Volts**
- **30 mA Ground Fault Circuit Interrupter with Test/Reset**
- **Contactor Rating of 50 Amps Per Pole**
- **Simple Installation**

Description

The patented APS-4 provides effective, economical automatic control of snow melting systems including those for gutter and down spouts. The ability to use multiple sensors ensures optimum control of large systems. Supply voltage options include 240 volt single phase or 208, 277 and 480 volts 3-phase, with a contactor rating of 50 amps per pole. The integral 30mA ground fault circuit interrupter with a test/reset facility ensures safety along with NEC and local code compliance. The APS-4 operates up to ten SC-40 Satellite Contactors for larger loads.

The adjustable 10 hour hold-on timer keeps heaters operating after snow stops to ensure complete melting. A cycle switch can be used to operate heaters for the hold-on timer setting. This useful feature melts tracked or blowing snow or ice. LED indicators permit monitoring snow melting system operation.

The optional patented RCU-1 Remote Control provides monitoring and control of the snow melting system at a convenient location. For installation simplicity and low cost, sensors, the RCU-1, and satellite contactor control wiring is NEC Class 2. The APS-4's nonmetallic enclosure is rated for protected NEMA 3R locations in the temperature range of -40˚ to 160˚F (-40˚ to 60˚C).

Specifications and Ordering Information

Model Number	PCN	Stock
APS-4 Control Panel -1P (120V, 208V, 240V)	**389845**	**S**
APS-4 Control Panel -3P (277/480V)	**389861**	**S**

Stock Status: **S** = stock AS = assembly stock NS = non-stock
To Order—Specify model, PCN and quantity.

The ETI logo is a registered trademark of Environmental Technology, Inc. SIT is a trademark of Environmental Technology, Inc. Copyright 2000, All rights reserved.

SC-40
Satellite Contactor

- **Low Cost Control of Larger Snow Melting Systems**
- **Contactor Rating of 50 Amps Per Pole**
- **Supply Options: 208, 240, 277 and 480 volts**
- **Single and Three-Phase Power Control**
- **Integral 30mA GFCI**
- **UL Listed, CSA Certified**
- **Self-Test Feature**
- **Simple Installation**
- **Low Cost**

Description

The patented SC-40 Satellite Contactor is a power control peripheral for a APS-4 Snow Switch and similar Environmental Technology, Inc. products. The APS-4 Snow Switch operates the SC-40s whenever its contactor operates. That is, during snow and for the hold-on time thereafter.

The integral 30mA ground fault circuit interrupter (GFCI) along with a test/reset facility ensure safety along with NEC and local code compliance. Partitioning heater loads for multiple SC-40s prevents the nuisance GFCI tripping that is often unavoidable when controlling a large system with a single contactor. The self-test facility operates heaters for one minute with a duty cycle limited to 33% for safer heater testing during the summer months.

An APS-4 operates up to ten SC-40s. The size and location of the heaters determines the number of SC-40s required. The APS-4 and its SC-40s can be separated by up to 1,000ft (305m).

Supply voltage options include 240 single phase or 208, 277 and 480 volts 3 phase, with a contactor rating of 50 amps per pole. For installation simplicity, SC–40 control wiring is NEC Class 2.

The SC-40's non-metallic enclosure is rated for protected NEMA 3R locations in the temperature range of -40˚ to 160˚F (-40˚ to 60˚C).

Specifications and Ordering Information

Model Number	PCN	Stock
SC-40 Satellite Contactor (120V, 208V, 240C)	**389888**	**S**
SC-40 Satellite Contactor (277/480V)	**389896**	**S**

Stock Status: **S** = stock AS = assembly stock NS = non-stock
To Order—Specify model, PCN and quantity.

The ETI logo is a registered trademark of Environmental Technology, Inc. SHT is a trademark of Environmental Technology, Inc. Copyright 2000. All rights reserved.

GIT-4

Gutter Ice Melting Control

- **Automatic Gutter Ice Melting Control**
- **Energy Efficient**
- **Minimum Operating Costs**
- **Maintains Ice Melting Heater Efficiency**
- **Built-in Ground Fault Equipment Protection (GFEP) for Safety**
- **UL and CUL Listed to Standard 873**
- **Remote Monitor and Control Included**
- **Low Cost**
- **Simple Installation**

Description

Snow and ice on a roof cause a variety of expensive problems including gutter and down spout breakage and interior water damage. In addition, falling ice can endanger pedestrians. Using heating cables for ice melting can eliminate these problems, however uncontrolled heating is expensive and not energy efficient.

The computerized patented and patent pending GIT-4 Automatic Gutter Ice Melting Control operates ice melting heaters only while required thus insuring energy efficiency and low operating costs. A GIT-4 consists of a gutter-mounted computerized sensor and a control enclosure connected by a 12' 6" (3.8 meter) cable. If the distance between the sensor and control needs to be changed, please contact Customer Service. A GIT-4 includes an RCU-2 Remote Control Unit. It can be located up to 150 feet (45.7 meters) from the control enclosure. It mounts in a single-gang switch box.

The GIT-4 senses both moisture and temperature conditions in the gutter or down spout thus assuring optimum control. Ice melting heaters operate at temperatures below 38˚F (3.3˚C) while moisture is present. Operation continues a period of time thereafter to insure complete melting. While operating, the heaters are maintained at a nominal temperature of 38˚F (3.3˚C). The RCU-2 provides remote monitoring of the ice melting system operation. It also controls GFEP operation and can override automatic heater operation.

Line voltage and ice melting heater connections are located in the control enclosure. The GIT-4 operates from single-phase 120, 208/240 or 277 volt supply selected by a internal jumper connection that is set during installation. It controls single-phase ice melting heater loads of up to 26 amps. The GIT-4 meets the new NEC Class 2 low voltage requirement for wet locations. It is both UL and CUL Listed while the RCU-2 is a NEC Class 2 device. Safety testing was done to UL Standard 873.

Specifications and Ordering Information

Model Number	PCN	Stock
GIT-4 Gutter De-Icing/Sensor Control	**389810**	**S**

Stock Status: **S** = stock AS = assembly stock NS = non-stock
To Order—Specify model, PCN and quantity.

The ETI logo is a registered trademark of Environmental Technology, Inc. SIT is a trademark of Environmental Technology, Inc. Copyright 2000, All rights reserved.

CIT-1
Snow Sensor

- **Reliable Snow Sensing**
- **Senses Both Temperature and Precipitation**
- **Application Flexibility**
- **Simple Installation**
- **Field Proven in Thousands of Installations**

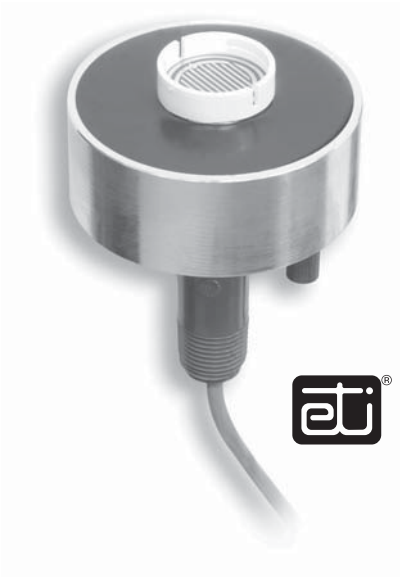

Description

The CIT-1 Snow Sensor detects falling or blowing snow as precipitation at temperatures below 38˚F(3.3˚C). The CIT-1 provides the industry's most versatile and cost effective automatic snow melting control when used with the EUR-5, APS-3B or APS-4 Control Panel. Reliability and sensitivity are key CIT-1 features. The solid state design combined with a rugged aluminum housing and epoxy potting ensure many years of trouble free service. Precision precipitation and temperature sensors ensure snow detection accuracy.

Typical applications include controlling snow melting systems for sidewalks, doorways, stairs, loading docks, ramps for the physically challenged and parking garages. Easy installation is another key CIT-1 feature. Low voltage operation, up to 2000' (609.6m) separation from the control panel, mast or roof mounting, and non-critical extension wiring are just a few of the features making this possible.

Specifications and Ordering Information

Model Number	PCN	Stock
CIT-1 Snow Sensor	**389749**	**S**

Stock Status: **S** = stock AS = assembly stock NS = non-stock
To Order—Specify model, PCN and quantity.

The ETI logo is a registered trademark of Environmental Technology, Inc. SIT is a trademark of Environmental Technology, Inc. Copyright 2000, All rights reserved.

LCD-1
Snow Switch

- **Minimum Snow Melting Costs**
- **No Supervision Required**
- **Low Cost**
- **Reliable Automatic Control**
- **UL Listed/CSA Certified**
- **Simple Installation**
- **Field Proven in Thousands of Installations**

Description

The LCD-1 Snow Switches are an energy saving alternative to thermostat, manual or timer controls. Their low price ideally suits them for cost-sensitive residential and commercial snow melting applications. Unlike thermostats, the LCD-1 and Snow Switches operate heaters when precipitation and temperature conditions indicate snow fall. This saves substantial energy compared to other control techniques.

The LCD-1 Snow Switches initiate snow melting at temperatures below 38˚F (3.3˚C) during precipitation and continue heater operation for five hours after snow stops. This ensures complete snow melting.

The LCD-1 Snow Switches operate from 120 volts AC 50/60 Hz. An integral relay rated for 120/240 volt AC 16 Amp loads permits direct heater control for small applications such as wheelchair ramps and stairways or may operate external contactors in larger installations.

Extensive quality control, high grade components and microprocessor technology contribute to trouble-free operation. These innovative, field-proven products provide reliable automatic control in thousands of installations.

Specifications and Ordering Information

Model Number	PCN	Stock
LCD-1 (UL) Snow Switch	**389781**	**S**
LCD-1 (CSA) Snow Switch	**389790**	**S**

Stock Status: **S** = stock AS = assembly stock NS = non-stock
To Order—Specify model, PCN and quantity.

The ETI logo is a registered trademark of Environmental Technology, Inc. SIT is a trademark of Environmental Technology, Inc. Copyright 2000, All rights reserved.

SIT-6E
Pavement Sensor

- **Reliable Snow Sensing**
- **Control Based on Pavement Conditions**
- **Rugged Construction**
- **Simple Installation**
- **Low Voltage Construction**

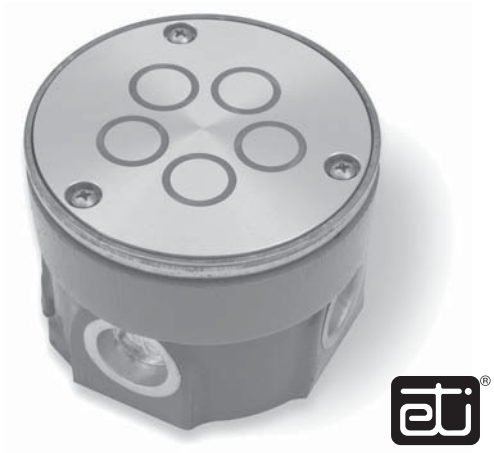

Description

The SIT-6E, which replaces the SIT-5E, reliably detects snow and ice conditions on pavement surfaces. This ensures that deicing heaters operate only while needed which minimizes energy costs without sacrificing snow melting effectiveness. A built-in hold-on timer keeps heaters operating for an hour after snow stops to help ensure complete snow melting.

The SIT-6E senses snow as moisture detected between the limits of -30 and 38˚F. Operation in the 32 to 38 degree temperature range eliminates unnecessary heater operation.

The SIT-6E accurately measures pavement temperature by compensating for its internal heating. This eliminates the cost and complexity of a separate pavement temperature sensor. For improved efficiency, the SIT-6E mounts closely to the deicing heaters to ensure that pavement and sensor become dry at about the same time.

The new mounting system helps align the SIT-6E with the pavement surface. Six available conduit locations add to installation flexibility and simplicity. The sensor subassembly is field replaceable without disturbing the pavement. The SIT-6E is a NEC Class 2 low voltage device which simplifies installation.

Only brass, epoxy, and stainless steel are exposed to the pavement surface. Precision machining gives the SIT-6E a handsome appearance that will please the building owner, engineer, and architect.

Specifications and Ordering Information

Model Number	PCN	Stock
SIT-6E Pavement Mounted Sensor	**389765**	**S**

Stock Status: **S** = stock AS = assembly stock NS = non-stock
To Order—Specify model, PCN and quantity.

The ETI logo is a registered trademark of Environmental Technology, Inc. SIT is a trademark of Environmental Technology, Inc. Copyright 2000, All rights reserved.

RCU-1
Remote Control Unit

- **Remote System Status Indication**
- **Convenient Manual Control for Melting Problem Areas**
- **Low Cost**
- **Simple Installation**

Description

The RCU-1 Remote Control Unit is a companion accessory to the EUR-5, APS-3B and the APS-4 Snow/Ice Melting Controllers. The RCU-1 provides a convenient and economical means to both monitor and manually control a snow/ice melting system from a remote location. The integral heater cycle push button operates heaters for the hold-on time setting on the host Control Panel, permitting tracked slush or drifted snow to be cleared independent of prevailing meteorological conditions. LEDs provide indication of system power supply and heater operation.

The RCU-1 Remote Control Unit employs an attractive single gang metallic device plate suitable for both flush and surface installations. The RCU-1 interfaces with its host Control Panel via a NEC Class 2 circuit which may have an installed length as great as 2,000'(609.6m) utilizing 2-conductor #18 AWG jacketed cable.

Specifications and Ordering Information

Model Number	PCN	Stock
RCU-1 Remote Control Unit	**389773**	**S**

Stock Status: **S** = stock AS = assembly stock NS = non-stock
To Order—Specify model, PCN and quantity.

The ETI logo is a registered trademark of Environmental Technology, Inc. SIT is a trademark of Environmental Technology, Inc. Copyright 2000, All rights reserved.

U Series

Heat Trace Connection System Accessories

203312

Single Entry Connection Box
- **NEMA 4X**
- **Entry for 1 Cable**
- **3/4" Conduit Hub Opening**

Multiple Entry Connection Box
- **NEMA 4X**
- **Entry for up to 3 Cables**
- **Power or Tee Connection**
- **3/4" Conduit Hub Opening**

End Seal Fitting
- **NEMA 4X**
- **Fits All Pipe Sizes**
- **Mounts Above the Insulation for Easy Access**

Pipe Standoff Kit
- **Brings Cable Outside Insulation to Customer Supplied Junction Box**

Under Insulation End Seal Kit
- **3" Dia. Curved Mounting Surface**
- **Stainless Steel Hardware**
- **1" Wide Strapping Channel for Cecure Mounting**

Small Pipe Adapter for Pipes Under 1-1/2" Diameter

Description

The U-Series Connection System represents cutting edge design in heat tracing accessories. Each model in this series is designed to satisfy the unique demands of a particular operation. These high-quality models combine a variety of functions in a convenient, easy-to-use and economical package.

Applications

These accessories are designed to connect SRL, SRM/E and CWM heating cables to customer-supplied wiring in any of the following applications:

- Freeze Protection
- Piping Process Temperature Maintenance
- Fluid Flow and Viscosity Maintenance

Approvals

UL Listed
Ordinary Areas

CSA Certified
Ordinary Areas
Class I, Div. 2, Groups A, B, C, and D Class II, Div. 2, Groups F, G
Class I, Div. 2, Zone 1 or 2 AEx e II

FM Approved
Ordinary Areas
Class I, Div. 2, Groups B, C, D
Class II, Div. 2, Groups E, F, G
Class III
Class I, Div. 2, Zone 1 or 2 AEx e II

Features

- Molded of Durable Polyphenylene Sulphide Plastic Material*
- Maximum Pipe Temperature 482˚F (250˚C)
- Corrosion Resistant
- Thermal Stability
- Non-Flammable
- High Strength and Rigidity
- Captive Hardware
- Stainless Steel Hardware to Ensure the Integrity of the System
- Liquid Tight Design Prevents Moisture from Reaching the Electrical Connections
- All Models are Rated NEMA 4X.

* This crystalline, high-performance engineering TP is characterized by outstanding high-temperature stability, inherent flame resistance and a broad range of chemical resistance. PPS plastics and compounds provide various combinations of high mechanical strength, impact resistance and electrical insulation, with its high arc resistance and low arc tracking.

U Series
Heat Trace Connection System Accessories *(cont'd.)*

Accessories

UPC
Power Connection Box

NEMA 4X rated junction box designed to connect SRL, SRM/E and CWM cables to customer supplied power wiring. This kit provides water-resistant cable entry for one cable, enclosure support, terminal block, and a water-resistant corrosion-resistant wiring enclosure with a 3/4" opening to accept a conduit hub (CCH-2 or equal). A pipe strap (PS Series) is required to attach this model to a pipe. Small pipe adapter is available for pipe size less than 1-1/2".

UMC
Multiple Entry Connection Box

NEMA 4X rated junction box designed to connect two or three SRL, SRM/E and CWM cables. This model provides water-resistant cable entry, enclosure support, terminal block and a water-resistant, corrosion-resistant wiring enclosure. In addition to splicing or teeing cables, this model can be used to provide power connection to up to three cables from one connection kit. A pipe strap (PS series) is required to attach this model to a pipe. Small pipe adapter is available for pipe size less than 1-1/2".

UES
Above Insulation End Seal Kit

NEMA 4X rated end seal designed of to terminate SRL, SRM/E and CWM cables. This kit provides water-resistant cable entry for one cable, water-resistant and corrosion-resistant pipe support to bring the cable end outside the insulation for easy access. A pipe strap (PS Series) is required to attach this model to a pipe. Small pipe adapter is available for pipe size less than 1-1/2".

RTES
Under Insulation End Seal Kit

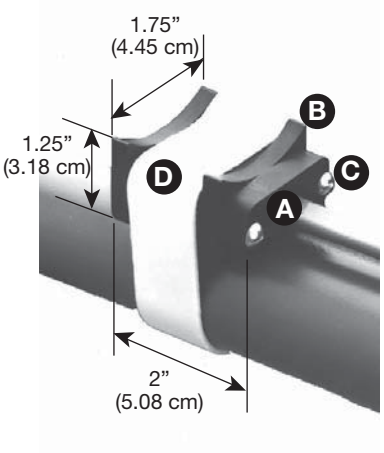

RTES End Seal Fitting is a NEMA 4X rated enclosure designed to terminate all Chromalox Rapid Trace® heating cables. This model provides water-resistant cable entry for one cable, enclosure support and a water-resistant corrosion-resistant enclosure. The fitting has two different curved mounting surfaces. One side has a 1-1/2" radius curved surface that provides stable support on pipes with a diameter of 3" or more. The other side has a 1/2" radius curved surface which permits a better fit on smaller pipes. In addition, this side also has four "feet" for installation on flat surfaces.

- **A** Cable entry
- **B** 3" dia. curved mounting surface
- **C** Stainless steel hardware
- **D** 1" w strapping channel for secure mounting

U Series

Heat Trace Connection System Accessories *(cont'd.)*

UPC Single Entry Power Connection Kit PCN 393553

Kit Includes:
1 Junction box with DIN rail & terminal block
1 Compression fitting
1 Locknut
1 Silicone termination boot
1 Pipe standoff
1 O-ring
1 Self-regulating cable grommet
1 Constant wattage cable grommet

UMC Multiple Entry Connection Kit PCN 393561

Kit Includes:
1 Junction box with din rail and terminal block
1 Compression fitting
1 Locknut
3 Silicone termination boots
1 Pipe standoff
1 O-ring
1 Self-regulating cable grommet
1 Constant wattage cable grommet
1 Self-regulating cable grommet insert
1 Constant wattage cable grommet insert

SSK Single Entry Sealing Kit PCN 393617

Kit Includes:
1 Compression fitting
1 Locknut
3 Silicone termination boots
1 Pipe standoff
1 O-ring
1 Self-regulating cable grommet
1 Constant wattage cable grommet
2 Insulated butt splice 10-12 AWG
2 Insulated butt splice 14-16 AWG
1 Uninsulated butt splice 10-12 AWG

UES Above Insulation End Seal Kit PCN 393570

Kit Includes:
1 End cap
1 Pipe standoff
1 Self-regulating cable grommet
1 Constant wattage cable grommet

RTES Under Insulation End Seal Kit PCN 389570

1 End Cap
1 Pressure Plate
1 GRSR Self-Regulating Cable Sealing Grommet
1 GRCW Constant Wattage Cable Sealing Grommet

SPA Small Pipe Adapter PCN 393609

Kit Includes:
1 Small pipe adapter

U Series

Heat Trace Connection System Accessories *(cont'd.)*

AT-1 Aluminum Tape Cable Attachments
PCN 383355

180' roll aluminum foil installation tape with pressure sensitive acrylic adhesive. 2-mil thickness with high tensile strength; 2-½" wide. 200°F (93°C) rating. Minimum application temperatures 40°F (5°C).

FT-3 Fiberglass Tape Cable Attachments
PCN 389941

66' roll glass cloth installation tape with pressure sensitive thermosetting adhesive. 3/8" wide. 310°F (155°C) rating. Strap at one foot intervals. Minimum application temperature 40°F (5°C).

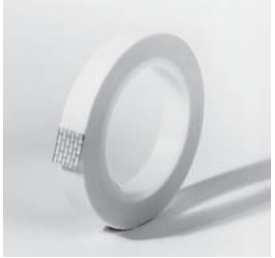

PS-1, PS-3, PS-10 Pipe Straps
PCN 382352, 382360, 382379

Used for attaching UPC and UMC kits to pipe.

PS-1	1/2" to 3/4" pipes (PCN 382352)
PS-3	1" to 3-1/2" pipes (PCN 382360)
PS-10	2-1/2" to 9" pipes (PCN 382379)

Stripping Tool
PCN 393510

For SR Cables, Blades for HSRL and SRL Cables included

Replacement Blades

PCN 393529

Blade Set for Stripping HSRM and SRM/E Cables

PCN 393537

Blade Set for Stripping HSRL and SRL Cables

DL & EL Series
Connection Accessories

DL Series
- **Re-usable Components**
- **Through-the-Insulation Mounting Provides High Visibility**
- **Easy Access for Maintenance**

EL Series
- **Low Profile Provides Easy Installation of Insulation**
- **Contains Standard, Off-the-Shelf Electrical Connection Components**

Chromalox offers cable termination kits in DL for high profile, through-the-insulation styles and EL for low profile, under-the-insulation. Both styles are approved for hazardous area applications.

RTPC

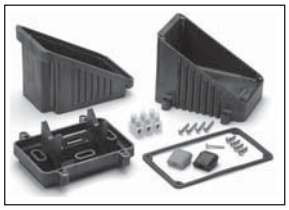

RTST

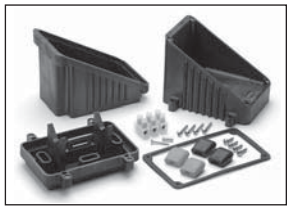

RTES

Ordering Information

DL Accessories		EL Accessories	
Model	**Used With**	**Model**	**Used With**
Power Connection Kit			
RTPC RTPC-SL	SRL-C SRL-CR, CT CWM-C CWM-CT SRL-MC SRL-MCR, MCT SRM/E-C SRM/E-CT	SSK PJB RG-PK-1	SRL-C, SRL-CR, SRL-CT, SRF-C, CWM-C, CWM-CT SRF-RG
Splice & Tee Kit			
RTST RTST-SL	SRL-C SRL-CR, CT CWM-C CWM-CT SRL-MC SRL-MCR, MCT SRM/E-C SRM/E-CT	RT-RST RT-TST RG-SK-1	SRL-C, SRL-CR, SRF-C CWM-C, CWM-CT SRF-RG
End Seal Kit			
RTES	SRL-C SRL-CR, CT CWM-C CWM-CT SRL-MC SRL-MCR, MCT SRM/E-C SRM/E-CT	RT-RES RG-EK-1	SRL-C, SRL-CR, SRF-C SRF-RG

To Order — Refer to the DL & EL General Application Accessories in this section.

Attachment Accessories

Model	Description
FT-3	Fiberglas® tape to affix cable to pipe
AT-1	Aluminum tape to improve heat transfer to pipe
PS-1	Pipe strap to mount power connection box to pipe, 1/2 - 3/4" pipes
PS-3	Pipe strap to mount power connection box to pipe, 1 - 3-1/2" pipes
PS-10	Pipe strap to mount power connection box to pipe, 2-1/2 - 9" pipes
CL-1	Caution labels, apply every 10 feet to insulation to alert personnel

To Order — Refer to the DL & EL General Application Accessories in this section.

DL
Integrated Connection Accessories

- **Power Connection Box**
  - **NEMA 4X Enclosure**
  - **Cable Entry Up to 3 Cables**
  - **3/4" Conduit Hub Opening**
- **Splice & Tee Box**
  - **NEMA 4X Enclosure**
  - **Cable Entry Up to 3 Cables**
  - **Straight or Tee Connections**
- **End Seal Fitting**
  - **NEMA 4X Enclosure**
  - **Fits All Pipe Sizes**
  - **Mounting Feet for Installing on Flat Surfaces**
- **Stainless Steel Hardware**
- **Corrosion & Weather Resistant Ryton® Construction**

RTPC

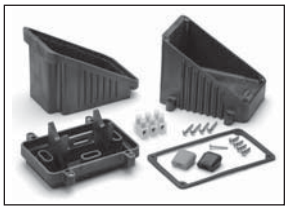

RTST

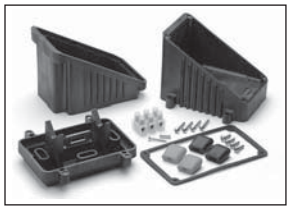

RTES

Description

The DL Series Installation Accessories for Chromalox heat tracing products represents the state of the art in heat tracing. Each model in the series is designed to satisfy the demands of a particular operation. These high-quality models combine a variety of functions in a convenient, easy to use and economical package.

Applications

Connection of all Rapid Trace Heating Cables to Customer Supplied Power Wiring in any of the following applications:

- Hydrocarbon and Chemical Product Piping
- Process Temperature Maintenance
- Fluid Flow and Viscosity Maintenance
- Freeze Protection.

Features

- Molded of Durable Plastic Material (Ryton®, PPS)[1]
- High Service Temperature
- Corrosion Resistant
- Integrated Connection Accessories and Controls
- Thermal Stability
- Non-Flammable
- High Strength and Rigidity
- Stainless Steel Hardware to Ensure the Integrity of the System
- Liquid Tight Design prevents moisture from reaching the electrical connections. All models are rated NEMA 4X.

Approvals[2]

UL, CSA, FM Approved for most models, consult specific product information.

UL Listed for ordinary areas

CSA Certified for ordinary and:

- Class I, Div. 2, Groups A, B, C, D
- Class II, Div. 2, Groups F, G.

FM Approved for ordinary and:

- Class I, Div. 2, Groups B, C, D
- Class II, Div. 2, Groups F, G
- Class III, Div. 2 Areas.

Notes —
1. Ryton®, is a registered trade name of Phillips Chemical Company.
2. Depends on specific model and cable applied.

DL
Integrated Connection Accessories *(cont'd.)*

RTPC — Power Connection Kit

RTPC Power Connection Box is a NEMA 4X rated junction box designed to connect all Chromalox Rapid Trace Heating Cables to customer supplied power wiring. This kit provides waterproof cable entry for up to three cables, enclosure support, terminal block and a waterproof, corrosion resistant wiring enclosure with an opening to accept a 3/4" conduit hub (Chromalox CCH-2 or equal). A pipe strap (Chromalox PS or equal) is required to attach this model to a pipe.

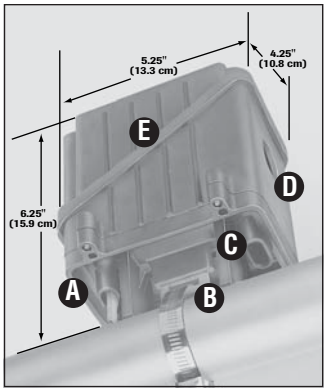

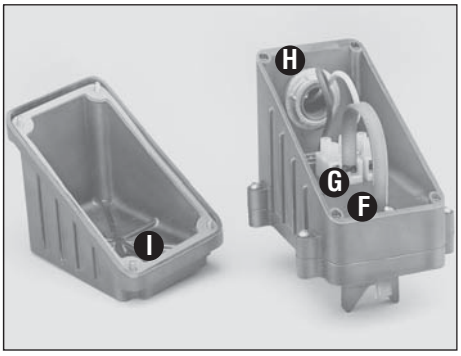

RTPC — Power Connection Kit

1 molded junction box consisting of:
- 1 base
- 1 box w/conduit opening
- 1 lid

1 three position terminal block
1 mounting screw for terminal block
1 GRSR self-regulating cable sealing grommet
1 GRCW constant wattage sealing grommet

Ordering Information — RTPC

Model	PCN	Stock	Wt. (Lbs.)
RTPC	389554	S	1
RTPC-SL1	389626	S	2
RTPC-SL2	389634	S	2
RTPC-SL3	389642	S	2

Construction

A Three strategically placed cable entries allow maximum flexibility for insulation (Heating cable cut away for clarity).

B Stainless steel tiedown support provides positive attachment to pipes.[1]

C Heavy duty support legs give stable pipe mounting and provide conduit clearance for applications with up to three inches of insulation.

D Opening for 3/4" (20 mm) conduit hub.[1]

E Oblique sided box and cover allow easy access for wiring.

F Cable grommets provide water-tight seal between base, box and cable. Use GRSR with all self-regulating cable. Use GRCW for constant wattage cables. One of each grommet included in kit. See table below for spare grommets.

G Three position terminal block for easy wiring.

H Power wiring entry. Conduit hub not included.[1]

I Gasket provides water-tight seal between box and lid. It is affixed to the lid and holds the mounting hardware during assembly.

Note 1 —Refer to DL & EL General Application Accessories at the end of this section.

RTPC-SL — Power Connection Kit w/Signal Light

1 molded junction box consisting of:
- 1 base
- 1 box w/conduit opening
- 1 lid *w/signal light installed (LED style)* Specify: SL1(120V), SL2(208-240V), SL3(277V) operation

1 three position terminal block
1 mounting screw for terminal block
1 GRSR self-regulating cable sealing grommet
1 GRCW constant wattage sealing grommet

Spare Grommets — *PCN*

GRS	RTD/Capillary type	**385000**
GR0	Blank	**385019**
GRSR	Self Regulating type	**389714**
GRCW	Constant Wattage type	**389722**

DL
Integrated Connection Accessories *(cont'd.)*

RTST — Splice & Tee Kit

RTST Splice & Tee Box is a NEMA 4X rated junction box designed to make straight or tee splices for all Chromalox Rapid Trace Heating Cables. This model provides waterproof cable entry (for two cables for a splice or three cables for a tee), enclosure support, terminal block and a waterproof, corrosion resistant wiring enclosure. A pipe strap (Chromalox PS or equal) is required to attach this model to a pipe.

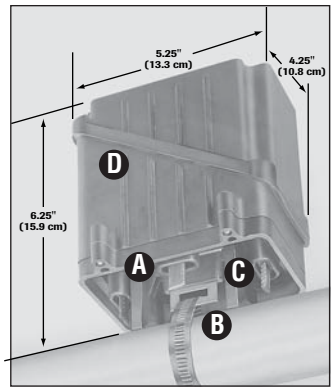

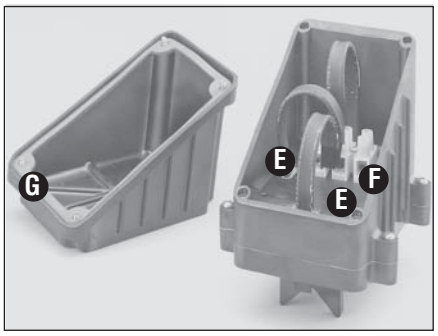

RTST — Splice & Tee Kit

1 molded junction box consisting of:
- 1 base
- 1 box
- 1 lid

1 three position terminal block
1 mounting screw for terminal block
3 GRSR Self-regulating cable sealing grommet
3 GRCW Constant wattage sealing grommets

Ordering Information — RTPC

Model	PCN	Stock	Wt. (Lbs.)
RTST	389562	S	1
RTST-SL1	389650	S	2
RTST-SL2	389669	S	2
RTST-SL3	389677	S	2

Construction

A Three strategically placed cable entries allow maximum flexibility for insulation (heating cable cut away for clarity).

B Stainless steel tiedown support provides positive attachment to pipes.[1]

C Heavy duty support legs give stable pipe mounting and provide conduit clearance for applications with up to three inches of insulation.

D Oblique sided box and cover allow easy access for wiring.

E Cable grommets provide water-tight seal between base, box and cable. Use GRSR with all self-regulating cable. Use GRCW for constant wattage cables. Three of each grommet included in kit. See table below for spare grommets.

F Three position terminal block for easy wiring.

G Gasket provides water-tight seal between box and lid. It is affixed to the lid and holds the mounting hardware during assembly.

Note 1 —Refer to DL & EL General Application Accessories at the end of this section.

RTST-SL — Splice & Tee Kit w/Signal Light

1 molded junction box consisting of:
- 1 base
- 1 box
- 1 lid *w/signal light installed (LED style)*
  Specify: SL1 for 120 Volt, SL2 for 208-240 Volt, SL3 for 277 Volt operation

1 three position terminal block
1 mounting screw for terminal block
3 GRSR Self-regulating cable sealing grommet
3 GRCW Constant wattage sealing grommet

Spare Grommets		*PCN*
GRS	RTD/Capillary type	**385000**
GR0	Blank	**385019**
GRSR	Self Regulating type	**389714**
GRCW	Constant Wattage type	**389722**

DL
Integrated Connection Accessories *(cont'd.)*

RTES — End Seal Kit

RTES End Seal Fitting is a NEMA 4X rated enclosure designed to terminate all Chromalox Rapid Trace Heating Cables. This model provides waterproof cable entry for one cable, enclosure support and a waterproof corrosion resistant enclosure. The fitting has two different curved mounting surfaces. One side has a 1-1/2" radius curved surface that provides stable support on pipes with a diameter of 3" or more. The other side has a 1/2" radius curved surface which permits a better fit on smaller pipes. In addition, this side also has four "feet" for installation on flat surfaces.

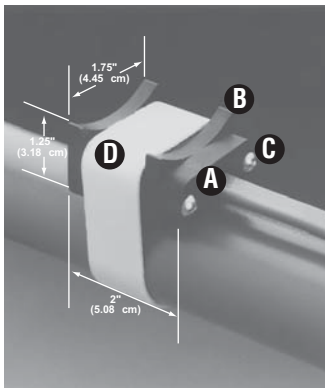

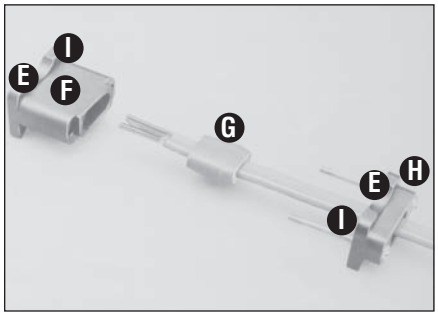

Construction

- **A** Cable entry.
- **B** Three inch diameter curved mounting surface.
- **C** Captured stainless steel hardware.
- **D** One inch wide strapping channel for secure mounting.
- **E** One-half inch radius curved mounting surface.
- **F** End cap.
- **G** Cable grommet provides water-tight seal between end cap and pressure plate. Use GRSR with all self-regulating cables. Use GRCW with constant wattage cables. One of each grommet included in kit. See table below for spare grommets.
- **H** Pressure plate.
- **I** Mounting feet for installation on flat surfaces.

RTES — End Seal Kit

1 end cap
1 pressure plate
1 GRSR Self-regulating cable sealing grommet
1 GRCW Constant wattage cable sealing grommet

Ordering Information — RTES

Model	PCN	Stock	Wt. (Lbs.)
RTES	389570	S	1

DL Accessory Components

MP-1 (385780)

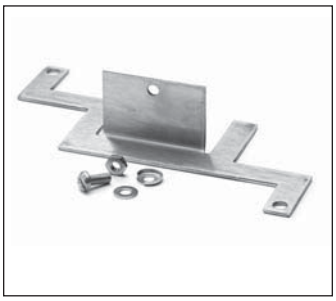

Mounting Plate Kit Attachments

For installing RTPC and RTST kits on flat surfaces. Kit includes:
1 mounting plate
1 lock washer
1 bolt
1 washer
1 nut

Note — The complete line of DL & EL Mounting Accessories is located at the end of this section.

Spare Grommets		*PCN*
GRS	RTD/Capillary type	**385000**
GR0	Blank	**385019**
GRSR	Self-Regulating type	**389714**
GRCW	Constant wattage type	**389722**

EL
Standard Connection Accessories

- **Junction Box Connection Kits for SRL, SRF and CWM Applications**
- **Splice & Tee Kits for SRL, SRF and CWM Applications**
- **End Seal Kits for SRL and SRF Applications**

Description

Each model in the EL Series Installation Accessories for Chromalox Rapid Trace Heating Cable products is designed to satisfy the demands of a particular operation. These high-quality models combine a variety of functions in a convenient, easy to use and economical package.

Applications

Connection of selected rapid trace heating cables to customer supplied power wiring in any of the following applications:

- Freeze Protection
- Hydrocarbon and Chemical Product Piping
- Process Temperature Maintenance
- Fluid Flow and Viscosity Maintenance.

Ordering Information

Model	Used With
Power Connection Kit	
SSK PJB	SRF-C, SRF-CR, SRL-C, SRL-CR, SRL-CT, CWM-C, CWM-CT
Splice & Tee Kit	
RT-RST RT-TST	SRL-C, SRL-CR, SRF-C CWM-C, CT
End Seal Kit	
RT-RES RT-TES	SRL-C, SRL-CR, SRF-C CWM-C, CT

To Order — Refer to the DL & EL General Application Accessories in this section.

Approvals

UL* Listed for ordinary areas
CSA* Certified for ordinary areas
FM** Approved for ordinary areas

* Does not include SSK
** Does not include SSK and PJB

EL
Standard Connection Accessories *(cont'd.)*

Accessories

Junction Box Connection Kit SSK (393617)

(1) compression fitting
(1) pipe stand off
(1) tube of RTV sealant
(1) O-ring
(1) 1" locknut
(1) self-regulating cable grommet
(1) constant wattage cable grommet
(1) silicone boot
(2) uninsulated barrel connectors
(2) insulated barrel connectors

Rain Tight Junction Box PJB (393676)

Polycarbonate watertight enclosure for use with SSK

End Seal Kit (for SRL cable) RT-RES (383574)

(5) 1/2" diameter heat shrink caps

Conduit Hub w/Grounding Lug CCH-2 (385650)

Corrision resistant hub for 3/4" conduit. Fits opening in RTPC. Includes ground connector

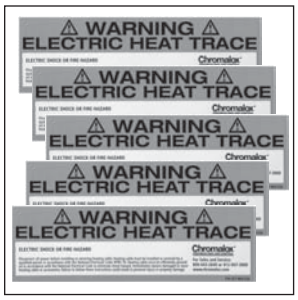

Caution Labels CL-1 (382424)

(5) electric heat tracing caution labels, weather resistant

Splice & Tee Kit (for Constant Wattage cable) RT-TST (383566)

(5) 7" long large heat shrink tubes
(10) 1-1/2" long small heat shrink tubes
(5) 10" lengths of sealant tape
(15) uninsulated barrel connectors
(1) tube of RTV sealant

Splice & Tee Kit (for Self-Regulating cable) RT-RST (383558)

(5) 8" long heat shrink tubes
(5) 1/2" lengths of sealant tape
(10) insulated barrel connectors
(5) uninsulated barrel connectors

DL & EL Series

General Application Accessories

Accessories

Conduit Hub Cable Attachments CCH-2 (385650)

Corrosion resistant for 3/4" conduit. Fits opening in RTPC and PJB. Includes a ground connector.

Metal Pipe Strap Kit Attachments PS-1, 3 and 10

PS-1 (382352) 1/2 to 3/4" pipes
PS-3 (382360) 1 to 3-1/2" pipes
PS-10 (382379) 2-1/2 to 9" pipes

Interlock Straps for larger diameter pipes

Fiberglas® Tape Cable Attachments FT-3 (389941)

66 foot roll glass cloth tape with pressure-sensitive thermosetting silicone adhesive 3/8" wide. 310°F (155°C) rating. Strap at one foot intervals at minimum application temperatures of -40°F (-40°C).

Caution Labels CL-1 (382424)

5 electric heat tracing caution labels, weather resistant.

Aluminum Tape Cable Attachments AT-1 (383355)

180 foot roll aluminum foil installation tape with pressure-sensitive acrylic adhesive. 2-mil thickness with high tensile strength; 2-1/2" wide. 200°F (93°C) rating. Minimum application temperatures 40°F (5°C).

Ordering Information — Cable Attachments

Description	Model	PCN	Stock	Wt. (Lbs.)
Fiberglas® Tape	**FT-3**	**389941**	**S**	1
Aluminum Tape	**AT-1**	**383355**	**S**	2
Metal Pipe Strap Kit	**PS-1**	**382352**	**S**	1
	PS-3	**382360**	**S**	1
	PS-10	**382379**	**S**	1
Caution Labels	**CL-1**	**382424**	**S**	1
Cable Stripping Tool with 16 awg blades	**ST-1**	**393510**	**S**	1
14 awg Replacement Blades	**BL-1**	**393529**	**S**	1
16 awg Replacement Blades	**BL-2**	**393537**	**S**	1
20 awg Replacement Blades	**BL-3**	**393545**	**S**	1

To Order – Specify model, PCN and quantity.

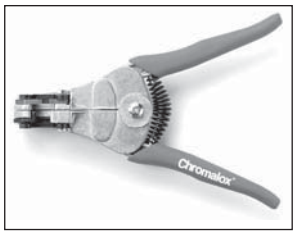

Cable Stripping Tool w/16 awg Blades ST-1 (393510)

Replacement Blades

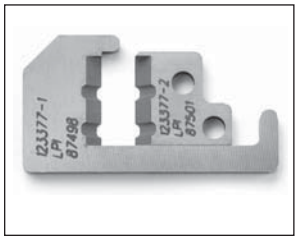

BL-1 14 awg (393529)
Blades for use with the Cable Stripping Tool. 14 awg blades for HSRM and SRM/E products.

BL-2 116 awg (393537)
Blades for use with the Cable Stripping Tool. 16 awg blades for HSRL and SRL, SRF and Thermwire products.

BL-3 120 awg (393545)
Blades for use with the Cable Stripping Tool. 20 awg blades for SRR, SRS and STW products.

HL

Hazardous Location Connection Kits

- **Power Connection Kit**
- **End Seal Kit**
- **Splice Kit**
- **Tee Kit**
- **Signal Light Kit**

Description

The HL Series Connection System for Chromalox heating cable products is specifically designed to comply with the requirements of Division 1 hazardous areas.

Applications

- Process Temperature Maintenance
- Fluid Flow and Viscosity Maintenance

Due to the nature of Division 1 hazardous location applications consultation with factory representative is required.

Features

- High strength aluminum alloy cast bodies
- Corrosion resistant
- Internally threaded junction box body with externally threaded cover
- Seal fitting applicable for use on vertical or horizontal conduit

The **Model HL-PC** Hazardous Location Power Connection Kit is a Division 1 certified junction box and seal fitting, providing an electrical power connection for 1 cable. Use with D1SL1 or D1SL2 signal light for voltage present indication at power connection or end seal.

The **Model HL-ES** Hazardous Location End Seal Kit is a Division 1 certified junction box and seal fitting. This kit is designed for end-of-run sealing for 1 cable.

The **Models HL-S and HL-T** Hazardous Location Kits consist of a Division 1 certified junction box and seal fittings. These kits are designed for the splicing of two, or three self-regulating cables in Division 1 areas.

- The splice kit provides entry for two cables
- The tee kit provides entry for three cables

Approvals

FM Approved
- Class I, Division 1, Groups B, C, D
- Class II, Division 1, Groups E, F, G
- Class III, Division 1

CSA Approved
- Class I, Division 1, Groups B, C, D
- Class II, Division 1, Groups E, F, G

Ordering Information

Kit	Description	Model	Stock	PCN
Power Connection	Electrical Service Connection	**HL-PC**	**S**	**382192**
End Seal	Terminating 1 Cable	**HL-ES**	**S**	**382221**
In-Line Splice	Splice 2 Cables	**HL-S**	**S**	**382205**
Tee Splice	Splice 3 Cables	**HL-T**	**S**	**382213**
120V Signal Light Kit	Voltage Indication	**D1SL1**	**S**	**393684**
208-277V Signal Light Kit	Voltage Indication	**DISL2**	**S**	**393692**

HL Series

General Application Accessories

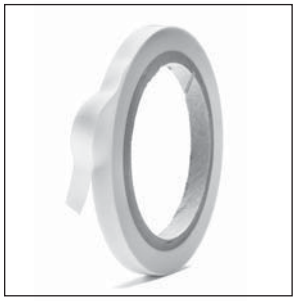

Fiberglas® Tape Cable Attachments FT-3 (389941)

66 foot roll glass cloth tape with pressure-sensitive thermosetting silicone adhesive 3/8" wide. 310°F (155°C) rating. Strap at one foot intervals at minimum application temperatures of -40°F (-40°C).

Metal Pipe Strap Kit Attachments

PS-1 (382352) 1/2 to 3/4" pipes

PS-3 (382360) 1 to 3-1/2" pipes

PS-10(382379) 2-1/2 to 9" pipes

Interlock Straps for larger diameter pipes

Aluminum Tape Cable Attachments AT-1 (383355)

180 foot roll aluminum foil installation tape with pressure-sensitive acrylic adhesive. 2-mil thickness with high tensile strength; 2-1/2" wide. 200°F (93°C) rating. Minimum application temperatures 40°F (5°C).

Caution Labels CL-1 (382424)

5 electric heat tracing caution labels, weather resistant.

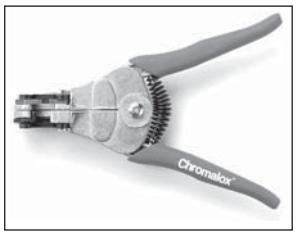

Cable Stripping Tool w/16 awg Blades ST-1 (393510)

Replacement Blades

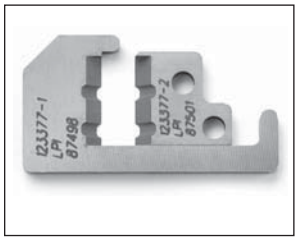

BL-1 14 awg (393529)
Blades for use with the Cable Stripping Tool. 14 awg blades for HSRM and SRM/E products.

BL-2 116 awg (393537)
Blades for use with the Cable Stripping Tool. 16 awg blades for HSRL and SRL, SRF and Thermwire products.

BL-3 120 awg (393545)
Blades for use with the Cable Stripping Tool. 20 awg blades for SRR, SRS and STW products.

Ordering Information — Cable Attachments

Description	Model	PCN	Stock	Wt. (Lbs.)
Fiberglas® Tape	**FT-3**	**389941**	**S**	1
Aluminum Tape	**AT-1**	**383355**	**S**	2
Metal Pipe Strap Kit	**PS-1**	**382352**	**S**	1
	PS-3	**382360**	**S**	1
	PS-10	**382379**	**S**	1
Caution Labels	**CL-1**	**382424**	**S**	1
Cable Stripping Tool with 16 awg blades	**ST-1**	**393510**	**S**	1
14 awg Replacement Blades	**BL-1**	**393529**	**S**	1
16 awg Replacement Blades	**BL-2**	**393537**	**S**	1
20 awg Replacement Blades	**BL-3**	**393545**	**S**	1

To Order – Specify model, PCN and quantity.

B100 & E100

Heat Trace/Freeze Protection Thermostats

- **B100 Direct Mount for Freeze Protection (Ambient)**
- **E100 Remote Mount for Heat Trace (Bulb & Capillary)**
- **22 Amp Resistive Switch**
- **Single and Dual Output Models**
- **± 1% Setpoint Repeatability**
- **Fast Response for Protection of Valves and Piping**
- **NEMA 4X, 7 and 9 Enclosures**

B100 / E100
NEMA 4X

(Models E121/122, B121 only)

B121 / E121
NEMA 7

Applications

- E100 NEMA 4X Line or Pipe Sensing
- B100 NEMA 4X Ambient Air Sensing
- E121/122/122P NEMA 7 Line or Pipe Sensing
- B121 NEMA 7 Ambient Air Sensing

WARNING: Hazard of Fire. These devices function as temperature controls only. Because they do not fail-safe, an approved temperature and/or pressure safety control must be used for safe operation.

Description

Maintaining proper viscosity and flow is critical in heat trace or freeze protection applications. The E100 remote mount thermostats utilize a stainless steel bulb and capillary design to accurately sense temperature at key points along a pipe. The B100 direct mount thermostats feature liquid-filled thermal assemblies and sense air temperatures from 15 to 140˚F. Both models are epoxy coated to seal from moisture and contaminants in compliance with NEMA 4X requirements. NEMA 7 stats E121/122/122P and B121 are designed for Class I, Division I and 2, Groups B, C, D, and Class 2, Division I and 2, Group E, F, G.

Specifications

Ambient Temperature Limits	-40˚ to +160˚F (B100); -58˚F to +160˚F (B121, B122, E122, E121) (-40 to +71˚C); set point typically shifts
Switch Output	One SPDT (types B100, E100, B121, E121); two SPDT (types E122, E122P)
Electrical Rating	22 Amps 125/250/480 Vac resistive
Weight	Types B100, E100: 1 lb., 8 oz (0,68 kg) Types B121, E121, E122, E122P: 3 lbs., 10 oz (1,6 kg.)
Electrical Connection	Types E121, E122, E122P, B121: terminal block; Types B100, E100: direct to swtich
Temperature Assembly	Types E100, E121, E122, E122P: 10 feet stainless steel bulb and capillary Types B100, B121: immersion stem
Fill	Non-toxic oil filled
Temperature Deadband	Typically 2% of range
Bulb Dimensions (E100, E121, E122)	Length 11-5/8", OD 1/8"
(B100, B121)	Length 2-11/16", OD 9/16"

B100 & E100

Heat Trace/Freeze Protection Thermostats *(cont'd.)*

Dimensions

E100 Heat Trace, NEMA 4X Line and Pipe Sensing

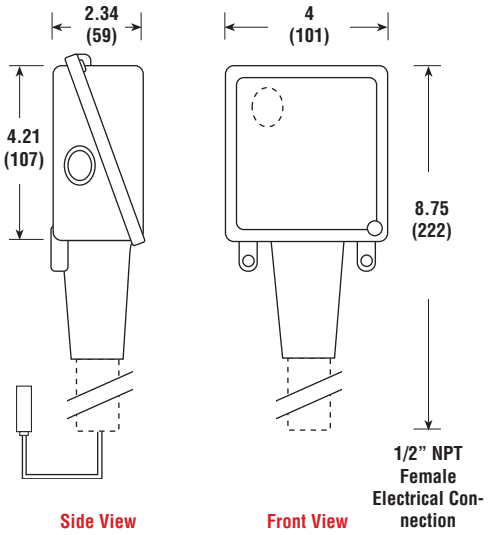

B100 Freeze Protection, NEMA 4X Ambient Sensing

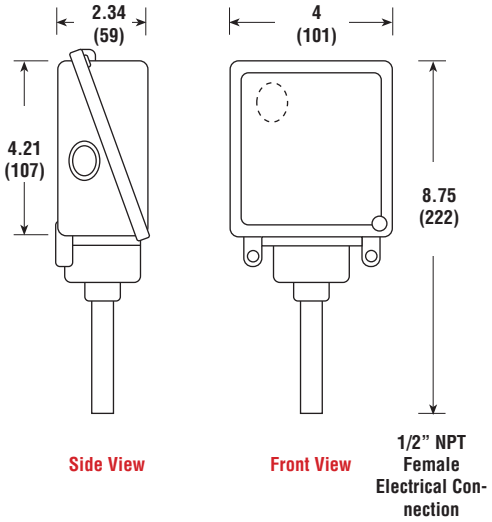

All Dimensions in Inches (mm)

E121/122 Heat Trace, NEMA 7 and 9 Line and Pipe Sensing

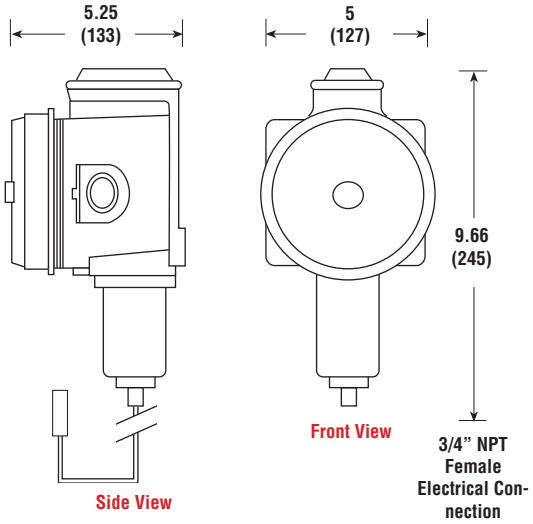

B121 Freeze Protection, NEMA 7 and 9 Ambient Sensing

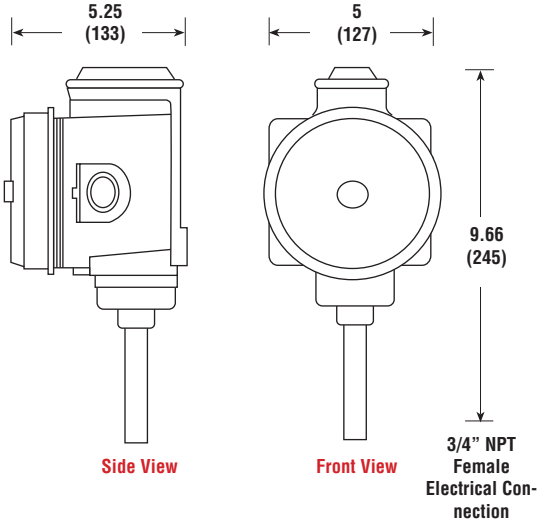

Ordering Information

Thermostat Type	Model	Switch Output	Enclosure NEMA	Stock	PCN
Heat Trace, Remote Bulb and Capillary 25 - 325˚F (-5 to +163˚C)	E100	Single Output	4X	**S**	**305322**
	E121	Single Output	4X,7,9	**S**	**384112**
	E122	Dual Output, Dual Setpoint	4X,7,9	NS	305349
	E122P	Dual Output, Common Setpoint	4X,7,9	NS	305357
Freeze Protection Direct Mount 15 - 140˚F (-10 to +60˚C)	B100	Single Output	4X	**S**	**305365**
	B121	Single Output	4X,7,9	**S**	**384104**

RBF

Heat Trace or Pipe Sensor

- **Heat Trace or Pipe Sensing Applications**
- **316 Stainless Steel Sheath**
- **Moisture Resistant Heads**
- **3/4" or 1/2" NPT Threaded Extension Wire Opening**
- **4" to 8" Cold Leg Standard for Varying Insulation Depths**
- **1" to 3" Pipe Fittings Standard**
- **100 ohm RTD, ± .12% Accuracy**
- **Standard Thermocouple Types J,K,T and E Available**
- **Fiberglass Insulated RTD Probe**
- **Standard Ungrounded Thermocouple Junction**
- **RTD or Universal Transmitter Available (Must Specify Temperature Range)**

Description

For measuring the surface temperature of process piping that is carrying products whose temperatures must be controlled to prevent freeze-up, or to maintain a viscosity level so that the inner medium will flow. The Thermocouple or RTD Sensor Element is made up with a 316SS sheath, and with a stainless steel mounting pad. Cold legs are available in customer specified lengths to accommodate pipe insulation thickness.

Approvals

Explosion Resistant Heads are rated for Class I Groups C, D, Division 1 and 2; Class II Groups E, F, G; Class III for use in hazardous locations as described by the National Electrical Code.

Custom Availabilities

- Connection Head Material (i.e. Polypropylene, Derlin or Cast Iron/Aluminum)
- Mounting Pad for Larger Pipe Sizes
- Hot & Cold Legs (Sheath Length)
- Sheath material (i.e. 304SS or 321SS)
- RTD Sheath Insulation Material (i.e. MGO or Teflon)

Model	Sensor	Range (˚F) Min	Range (˚F) Max
RBF185M-HT	RTD	-100	900
J48U-HT	Type J	32	900
K48U-HT	Type K	900	1800
T48U-HT	Type T	-300	500
E48U-HT	Type E	32	1800

Code	Sheath Leg Lengths Hot	Sheath Leg Lengths Cold
0304	3"	4"
0306	3"	6"
0308	3"	8"

Code	Mounting Pads Radius	Mounting Pads Pipe size
18RD	Fits All Pipe Sizes	

Code	Connection Heads
31SB/C	Aluminum. NEMA 4
49SB/C	Flip top aluminum. NEMA 4
71SB/C	Explosion resistant cast iron/aluminum NEMA 4
81SB/C	Explosion resistant 316L SS. NEMA 4X
91SB/C	316L stainless steel. NEMA 4X

RBF185M-HT	**0304**	**18RD**	**31SB/C**

Mounting pads conform to pipe once pipe clamps

In Stock:

Model	PCN
RBF185M-HT-0304-18RC-31SB/C	317315
RBF185M-HT-0304-18RC-71SB/C	317340

DL
Integrated Temperature Controls

- **Line or Ambient Sensing Thermostats**
- **ElectroMechanical Control**
- **Rugged, Corrosion Resistant Construction**
- **NEMA 4X Design with Corrosion and Weather Resistant Ryton® Construction**
- **Ambient Sensing**
  - **120 - 480 Vac**
  - **0 - 225°F Temp. Rating**
  - **9/16" OD x 4" SS Probe**
  - **Ordinary & Hazardous Area (Div. 2) Approvals**
- **Bulb & Capillary**
  - **120 - 480 Vac**
  - **0 - 400°F Setpoint Range**
  - **1/4" OD x 7-1/4" SS Bulb and 3 Ft. Capillary**
  - **Ordinary & Hazardous Area (Div. 2) Approvals**

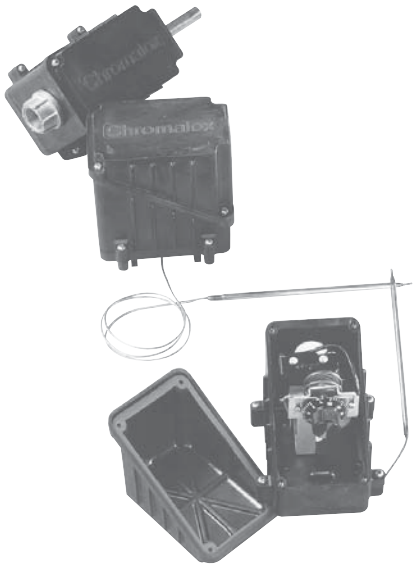

Description

The DL Series Single Point On/Off Temperature Controls from Chromalox represent the state of the art in heat tracing and are available in five models to handle a broad range of applications. Models include two ambient sensing thermostats, two line sensing thermostats and a line sensing solid state controller. These high-quality models combine temperature control and power connection in a convenient, easy to use and economical package.

Applications

- Hydrocarbon and Chemical Product Piping
- Process Temperature Maintenance
- Fluid Flow and Viscosity Maintenance
- Freeze Protection

Features

- Integrated Controls and Power Connections reduce installation hardware
- Molded of Durable Plastic Material (Ryton® PPS)[1]
- High Service Temperature
- Corrosion Resistant
- Thermal Stability
- Non-Flammability
- High Strength and Rigidity
- Stainless Steel Sensor Sheath
- Hermetically Sealed Switches on EP models permit control in Div. 2 hazardous areas
- Stainless Steel Hardware to ensure the integrity of the system
- Cable Terminations inside enclosure reduce installation time and cost
- Liquid Tight Design prevents moisture from reaching the electrical connections. All models are rated NEMA 4X.

Approvals[2]

UL, CSA, FM is carried by most models, consult specific product information.

UL Listed for ordinary areas

CSA Certified for ordinary and:

- Class I, Div. 2, Groups A, B, C, D
- Class II, Div. 2, Groups F, G

FM Approved for ordinary and:

- Class I, Div. 2, Groups B, C, D
- Class II, Div. 2, Groups F, G
- Class III, Div. 2 Areas.

Notes —
1. Ryton®, is a registered trade name of Phillips Chemical Company.
2. Depends on specific model and cable applied.

DL
Integrated Temperature Controls *(cont'd.)*

RTAS & RTAS-EP Ambient Sensing

RTAS is an ambient-sensing thermostat which is generally used for freeze protection in ordinary (non-hazardous) areas. The thermostat is mounted through the end of the oblique sided enclosure lid. In fact, because there is so much room in this model, multiple heating cables can be terminated. The stainless steel sheathed, inverted bellows probe provides good sensitivity, resulting in more accurate control.

RTAS-EP is a modified version of the RTAS which utilizes a hermetically sealed switch. Since this switch has no arcing contacts, it can be used in Division 2 Hazardous Areas.

Specifications

Temp. Setpoint Range — 0 to 225°F (-18 to 107°C) for RTAS/RTAS-EP

Microswitch® Rating — 22 Amps SPDT for RTAS; 11 Amps, RTAS-EP

Scale Division — 10°F (5.6°C)

Max. Sensor Exposure Temp. — 250°F (121°C)

Sensor Dimensions — 9/16" Dia. x 3" Long

Operating Ambient Temp. Range — -40°F to 160°F (-40 to 71°C)

Factory Preset and Calibrated — 40°F

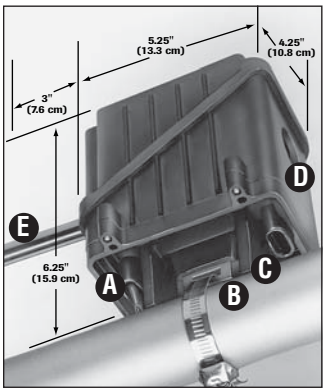

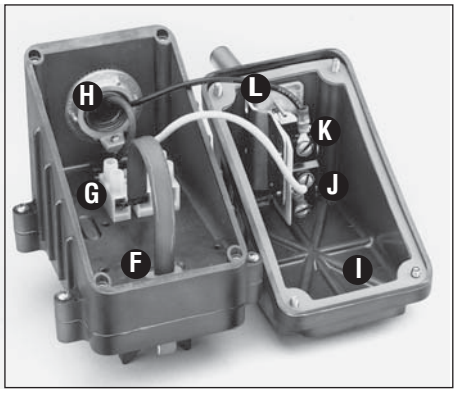

Construction

- **A** Strategically placed cable entries allow maximum flexibility for insulation (Heating cable cut away for clarity).
- **B** Stainless steel tiedown support provides positive attachment to pipes.[1]
- **C** Heavy duty support legs give stable pipe mounting and provide conduit clearance for applications with up to three inches of insulation.
- **D** Opening for 3/4" (20 mm) conduit hub.[1]
- **E** Stainless steel sheath temperature sensor.
- **F** Cable grommets provide water-tight seal between base, box and cable. Use GRSR with all self-regulating cables. Use GRCW with constant wattage cables. One of each grommet included in kit. See table below for spare grommets.
- **G** Three position terminal block for easy wiring.
- **H** Power wiring entry. Conduit hub not included.
- **I** Gasket provides water-tight seal between box and lid. It is affixed to the lid and holds the mounting hardware during assembly.
- **J** Thermostat switch.
- **K** Setpoint adjustment knob.
- **L** Setpoint indicator.

Note 1 —Refer to DL & EL General Application Accessories at the end of this section.

Spare Grommets		*PCN*
GRS	RTD/Capillary type	**385000**
GR0	Blank	**385019**
GRSR	Self-regulating cable type	**389714**
GRCW	Constant wattage cable type	**389722**

Ordering Information

Model	PCN	Switch Rating (Amps/Volts)	Max. Continuous Exposure Temp.		Max. Intermittent Exposure Temp.		Wt. (Lbs.)
			°F	°C	°F	°C	
RTAS	389589	22A @ 120 - 480	400	200	500	260	2
RTAS-EP	389597	11A @ 120 - 250	400	200	500	260	2

Stock Status: **S** = stock AS = assembly stock NS = non-stock
To Order—Specify model, PCN and quantity.

DL

Integrated Temperature Controls *(cont'd.)*

RTBC & RTBC-EP Bulb & Capillary

RTBC is a line-sensing thermostat which is generally used for process temperature maintenance applications in ordinary (non-hazardous) areas. The thermostat is mounted within the enclosure and the capillary is brought out through one of the openings in the bottom of the box. This design provides extra protection for the capillary, especially when the control is mounted on a pipe, for heat tracing applications. The three foot long stainless steel capillary provides good flexibility in mounting locations.

RTBC-EP is a modified version of the RTBC which utilizes a hermetically sealed switch. Since this switch has no arcing contacts it can be used in Division 2 Hazardous Areas.

Specifications

Temp. Setpoint Range — 0 to 400°F (-18 to 200°C) for RTBC, RTBC-EP

Microswitch® Rating — 22 Amps SPDT for RTBC; 11 Amps, RTBC-EP

Minor Scale Division — 10°F (5.6°C)

Max. Sensor Exposure Temp. — 450°F (230°C)

Sensor Dimensions — 1/4" (6.4mm) OD x 7-1/4" (18.4cm) L Bulb, 3' (1m) Capillary

Operating Ambient Temp. Range — -40°F to 160°F (-40 to 71°C)

Factory Preset and Calibrated — 200°F (93°C) for RTBC, RTBC-EP

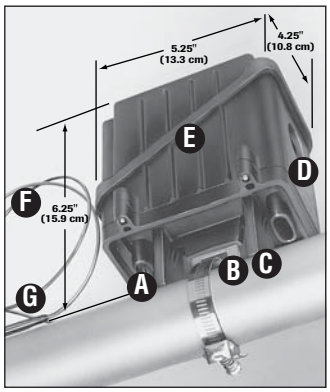

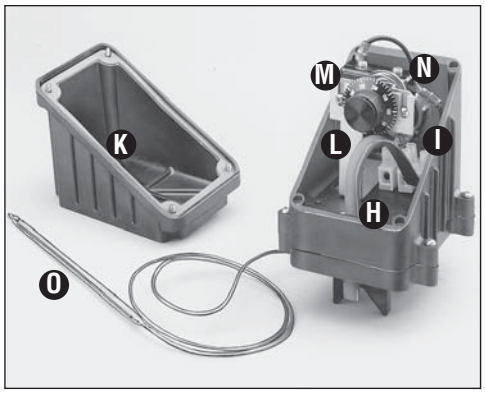

Construction

- **A** Strategically placed cable entries allow maximum flexibility for insulation (Heating cable cut away for clarity).
- **B** Stainless steel tiedown support provides positive attachment to pipes.[1]
- **C** Heavy duty support legs give stable pipe mounting and provide conduit clearance for applications with up to three inches of insulation.
- **D** Opening for 3/4" (20 mm) conduit hub.[1]
- **E** Oblique sided box and cover allow easy access for wiring.
- **F** Stainless steel capillary (3 ft/1m long).
- **G** Stainless steel sensing bulb.
- **H** Cable grommets provide water-tight seal between base, box, cable and capillary. Use GRSR with all self-regulating cables. Use GRCW with constant wattage cables. One of each grommet included in kit. See table below for spare grommets.
- **I** Three position terminal block for easy wiring.
- **J** Power wiring entry. Conduit hub not included.[1]
- **K** Gasket provides water-tight seal between box and lid. It is affixed to the lid and captures the mounting hardware.
- **L** Thermostat mounting bracket.
- **M** Setpoint adjustment knob.
- **N** Thermostat switch.
- **O** Stainless steel sensing bulb.

Note 1 —Refer to DL & EL General Application Accessories at the end of this section.

Spare Grommets		*PCN*
GRS	RTD/Capillary type	**385000**
GR0	Blank	**385019**
GRSR	Self-regulating cable type	**389714**
GRCW	Constant wattage cable type	**389722**

Ordering Information — RTBC

Model	PCN	Switch Rating (Amps/Volts)	Max. Continuous Exposure Temp.		Max. Intermittent Exposure Temp.		Wt. (Lbs.)
			°F	°C	°F	°C	
RTBC	389600	22A @ 120 - 480	400	200	500	260	2
RTBC-EP	389618	11A @ 120 - 250	400	200	500	260	2

Stock Status: **S** = stock AS = assembly stock NS = non-stock
To Order—Specify model, PCN and quantity.

intelliTRACE®

HTLS

Single-Loop Heat Tracing Line Sensing Control Panel

- **Solid State Relay Output Rated 30 Amps or Two-Pole Contactor Control Output**
- **Universal Inputs**
- **NEMA 4/4X Enclosure**
- **Ground Fault Alarm/Trip Monitor or GFI Circuit Breakers**
- **Programmable High/Low Temperature Alarms**
- **Programmable Low Current Alarm**
- **Optional RS-485 MODBUS® Communications**
- **120, 208, 240, and 277 VAC**

Applications

- Freeze Protection
- Fuel Gas Preheating and Superheating
- Fuel Oil Preheating
- Hydrocarbon and Chemical Product Piping
- Power Generation Plants

Description

The Chromalox HTLS series panels are microprocessor based temperature control and monitoring units for heat tracing used in freeze protection and process temperature control applications.

This series of panels can be configured for ambient or line sensing control. The HTLS series implement a scaleable design such that they can be configured with or without communications, ground fault monitoring or enclosure heater.

This unique format offers a design that can be tailored both by price and features to meet the most challenging demands in heat trace applications. For example: The HTLS series can be networked together via RS-485 MODBUS and the Chromalox Windows based Chromasoft SpecView software package.

The optional ground fault monitoring addresses the national electric code requirements and reduces the cost of installing costly ground-fault circuit breakers. In the event of sub-zero temperatures the optional enclosure heater is available.

The HTLS series have programmable inputs (thermocouple, RTD, mA, VDC), On/Off or PID control, Auto-tune function, High/Low temperature alarms, current alarm, and sensor failure indication. The heat tracing circuit is switched by a 30 Amp solid state relay rated at 40˚C ambient or optional 2-pole contactor.

The Chromalox HTLS series panel comes ready to install and includes control and power wiring terminal blocks for field connections.

Technical Specifications

Supply Voltage:	120, 208, 240, and 277 Vac
Operating Environment:	32 - 104˚F (0 - 40˚C) -32 - 104˚F (-34 - 40˚C) with enclosure heater option
Communications:	RS-485 MODBUS®
Input:	Thermocouple J, K, L, N, R, S, RTD, Current, Voltage Field Programmable for ˚C or ˚F
Output:	Solid State Relay rated @ 30 amps @ 40˚C or optional 2-pole contactor
Current Alarm (Low):	0 - 30 amps in 1 amp increments
Ground Fault Alarm Trip:	5 - 100mA
Temperature Alarms:	Process, Deviation, Band, High/Low, Latching/ Non-Latching (Manual/Automatic Reset) Programmable.
Control Modes:	Field Selectable On/Off, PID, SMART

intelliTRACE®

HTLS

Single-Loop Heat Tracing Line Sensing Control Panel *(cont'd.)*

Model

HTLS **IntelliTRACE 10000 Series Line Sensing Heat Trace Panel**

Panel Configuration

cUL and UL Listed Single Loop Line Sensing Temperature/Monitor Heat Trace Panel. Factory pre-wired for quick installation. Includes: Solid State Relay or Contactor Control, High or Low Temperature Alarm, Low Current Alarm, On/Off or PID Control, Universal Sensor Inputs, Dual Digital Displays, Terminal Blocks for Field Connections, Loop Enable/Disable, NEMA 4/4X rated Enclosure (12.5"H x 10.5"W x 6"D) for Indoor/Outdoor Applications. Options Include: Ground Fault Monitoring and Selectable Shutdown, GFI Thermal Magnetic Circuit Breakers, Enclosure Heater and RS-485 MODBUS Communications.

Code	Single Loop of Heat Trace Control
1	Solid State Relay Control Rated 30 Amps @ 40˚C Ambient (NEMA 4)
1C	Electromechanical Contactor Control Rated 30Amps @ 40˚C Ambient (NEMA4X)

Code	Voltage	
0	120 Vac	Single Phase
1	240 Vac	Single Phase
2	277 Vac	Single Phase
3	208 Vac	Single Phase

Code	Controller Options
0	IntelliTRACE Controller (Code 1 Solid State Relay)
1	IntelliTRACE Controller with Communications (Code 1 Solid State Relay)
2	IntelliTRACE Controller (Code 1C Contactor Control)
3	IntelliTRACE Controller with Communications (Code 1C Contactor Control)

Code	Ground Fault Monitoring Options
0	None
1	Ground Fault Monitor 120Vac (Includes Illuminated Reset Switch)
2	Ground Fault Monitor 240Vac (Includes Illuminated Reset Switch)
3	Ground Fault Monitor 277Vac (Includes Illuminated Reset Switch)
4	Ground Fault Monitor 208Vac (Includes Illuminated Reset Switch)
5	1-Pole Breaker, 120 Vac, 15 Amp Circuit Breaker w/30 mA Ground Fault Equipment Protection
6	1-Pole Breaker, 120 Vac, 20 Amp Circuit Breaker w/30 mA Ground Fault Equipment Protection
7	1-Pole Breaker, 120 Vac, 25 Amp Circuit Breaker w/30 mA Ground Fault Equipment Protection
8	1-Pole Breaker, 120 Vac, 30 Amp Circuit Breaker w/30 mA Ground Fault Equipment Protection
A	1-Pole Breaker, 277 Vac, 15 Amp Circuit Breaker w/30 mA Ground Fault Equipment Protection
B	1-Pole Breaker, 277 Vac, 20 Amp Circuit Breaker w/30 mA Ground Fault Equipment Protection
C	1-Pole Breaker, 277 Vac, 30 Amp Circuit Breaker w/30 mA Ground Fault Equipment Protection
E	2-Pole Breaker, 208/240 Vac, 15 Amp Circuit Breaker w/30 mA Ground Fault Equipment Protection
F	2-Pole Breaker, 208/240 Vac, 20 Amp Circuit Breaker w/30 mA Ground Fault Equipment Protection
G	2-Pole Breaker, 208/240 Vac, 25 Amp Circuit Breaker w/30 mA Ground Fault Equipment Protection
H	2-Pole Breaker, 208/240 Vac, 30 Amp Circuit Breaker w/30 mA Ground Fault Equipment Protection

Code	Enclosure Heater
0	None
1	Thermostat Controlled Enclosure Heater

HTLS -	1	0	0	5	0	**Typical Model Number**

Stock PCN Chart

Model	PCN
HTLS-10000	329666
HTLS-10010	329631
HTLS-11020	329643
HTLS-12030	329658

intelliTRACE®

HTLS

Dual-Loop Heat Tracing Line Sensing Control Panel

- **Solid State Relay Outputs Rated 30 Amps or Two-Pole Contactor Control Outputs**
- **Universal Inputs**
- **NEMA 4/4X Enclosure**
- **Ground Fault Alarm/Trip Monitors or GFI Circuit Breakers**
- **Programmable High/Low Temperature Alarms**
- **Programmable Low Current Alarm**
- **Optional RS-485 MODBUS® Communications**
- **120, 208, 240, and 277 VAC**

Description

The Chromalox HTLS series panels are microprocessor based temperature control and monitoring units for heat tracing used in freeze protection and process temperature control applications.

This series of panels can be configured for ambient or line sensing control. The HTLS series implement a scaleable design such that they can be configured with or without communications, ground fault monitoring or enclosure heater.

This unique format offers a design that can be tailored both by price and features to meet the most challenging demands in heat trace applications. For example: The HTLS series can be networked together via RS-485 MODBUS and the Chromalox Windows based Chromasoft SpecView software package.

The optional ground fault monitoring addresses the national electric code requirements and reduces the cost of installing costly ground-fault circuit breakers. In the event of sub-zero temperatures the optional enclosure heater is available.

The HTLS series have programmable inputs (thermocouple, RTD, mA, VDC), On/Off or PID control, Auto-tune function, High/Low temperature alarms, current alarm, and sensor failure indication. The heat tracing circuit is switched by a 30 Amp solid state relays rated at 40˚C ambient or optional 2-pole contactors.

The Chromalox HTLS series panel comes ready to install and includes control and power wiring terminal blocks for field connections.

Applications

- Freeze Protection
- Fuel Gas Preheating and Superheating
- Fuel Oil Preheating
- Hydrocarbon and Chemical Product Piping
- Power Generation Plants

Technical Specifications

Supply Voltage:	120, 208, 240, and 277 Vac
Operating Environment:	32 - 104˚F (0 - 40˚C) -32 - 104˚F (-34 - 40˚C) with enclosure heater option
Communications:	RS-485 MODBUS®
Input:	Thermocouple J, K, L, N, R, S, RTD, Current, Voltage Field Programmable for C or F
Output:	Solid State Relay rated @ 30 amps @ 40˚C or optional 2-pole contactors
Current Alarm (Low):	0 - 30 amps in 1 amp increments
Ground Fault Alarm Trip:	5 - 100mA
Temperature Alarms:	Process, Deviation, Band, High/Low, Latching/ Non-Latching (Manual/Automatic Reset) Programmable.
Control Modes:	Field Selectable On/Off, PID, SMART

intelliTRACE®

HTLS

Dual-Loop Heat Tracing Line Sensing Control Panel

(cont'd.)

Model

HTLS **IntelliTRACE 20000 Series Line Sensing Heat Trace Panel**

Panel Configuration

cUL and UL Listed Dual Loop Line Sensing Temperature/Monitor Heat Trace Panel. Factory pre-wired for quick installation. Includes: Solid State Relays or Contactor Control, High or Low Temperature Alarm, Low Current Alarms, On/Off or PID Control, Universal Sensor Inputs, Dual Digital Displays, Terminal Blocks for Field Connections, Loop Enable/Disable, NEMA 4/4X rated Enclosure (16"H x 14"W x 8"D) for Indoor/Outdoor Applications. Options Include: Ground Fault Monitoring and Selectable Shutdown, GFI Thermal Magnetic Circuit Breakers, Enclosure Heater and RS-485 MODBUS Communications.

Code	Dual Loop of Heat Trace Control
2	Solid State Relay Control Per Loop Rated 30 Amps @ 40˚C Ambient (NEMA 4)
2C	Electromechanical Contactor Control Per Loop Rated 30Amps Per Loop @ 40˚C Ambient (NEMA 4X)

Code	Voltage	
0	120 Vac	Single Phase
1	240 Vac	Single Phase
2	277 Vac	Single Phase
3	208 Vac	Single Phase

Code	Controller Options
0	IntelliTRACE Controllers (Code 2 Solid State Relay)
1	IntelliTRACE Controllers with Communications (Code 2 Solid State Relay)
2	IntelliTRACE Controllers (Code 2C Contactor Control)
3	IntelliTRACE Controllers with Communications (Code 2C Contactor Control)

Code	Ground Fault Monitoring Options
0	None
1	Ground Fault Monitors 120Vac (Includes Illuminated Reset Switch)
2	Ground Fault Monitors 240Vac (Includes Illuminated Reset Switch)
3	Ground Fault Monitors 277Vac (Includes Illuminated Reset Switch)
4	Ground Fault Monitors 208Vac (Includes Illuminated Reset Switch)
5	Two 1-Pole Breakers, 120 Vac, 15 Amp Circuit Breakers w/30 mA Ground Fault Equipment Protection
6	Two 1-Pole Breakers, 120 Vac, 20 Amp Circuit Breakers w/30 mA Ground Fault Equipment Protection
7	Two 1-Pole Breakers, 120 Vac, 25 Amp Circuit Breakers w/30 mA Ground Fault Equipment Protection
8	Two 1-Pole Breakers, 120 Vac, 30 Amp Circuit Breakers w/30 mA Ground Fault Equipment Protection
A	Two 1-Pole Breakers, 277 Vac, 15 Amp Circuit Breakers w/30 mA Ground Fault Equipment Protection
B	Two 1-Pole Breakers, 277 Vac, 20 Amp Circuit Breakers w/30 mA Ground Fault Equipment Protection
C	Two 1-Pole Breakers, 277 Vac, 30 Amp Circuit Breakers w/30 mA Ground Fault Equipment Protection
E	Two 2-Pole Breakers, 208/240 Vac, 15 Amp Circuit Breakers w/30 mA Ground Fault Equipment Protection
F	Two 2-Pole Breakers, 208/240 Vac, 20 Amp Circuit Breakers w/30 mA Ground Fault Equipment Protection
G	Two 2-Pole Breakers, 208/240 Vac, 25 Amp Circuit Breakers w/30 mA Ground Fault Equipment Protection
H	Two 2-Pole Breakers, 208/240 Vac, 30 Amp Circuit Breakers w/30 mA Ground Fault Equipment Protection

Code	Enclosure Heater
0	None
1	Thermostat Controlled Enclosure Heater

HTLS -	2	0	0	6	0	**Typical Model Number**

Stock PCN Chart

Model	PCN
HTLS-20000	329674

intelliTRACE®

HTLS

Three-Loop Heat Tracing Line Sensing Control Panel

(cont'd.)

Model

HTLS **IntelliTRACE 30000 Series Line Sensing Heat Trace Panel**

Panel Configuration

cUL and UL Listed Three Loop Line Sensing Temperature/Monitor Heat Trace Panel. Factory pre-wired for quick installation. Includes: Three-Pole Door-Interlocked Disconnect Switch, Solid State Relay or Contactor Control, High or Low Temperature Alarm, Low Current Alarms, On/Off or PID Control, Universal Sensor Inputs, Dual Digital Displays, Terminal Blocks for Field Connections, Loop Standby Mode, NEMA 4 Steel Enclosure (20"H x 20"W x 8"D) for Indoor/Outdoor Applications. Options Include: Ground Fault Monitoring and Selectable Shutdown, GFI Thermal Magnetic Circuit Breakers, Enclosure Heater and RS-485 MODBUS Communications.

Code	Three Loop of Heat Trace Control
3	Solid State Relay Control Per Loop Rated 30 Amps @ 40˚C Ambient
3C	Electromechanical Contactor Control Per Loop Rated 30Amps Per Loop @ 40˚C Ambient

Code	Voltage
1	240 Vac Cable (2-P Breakers) 240 Vac Three Phase Incoming Power
2	240 Vac Cable (1-P Breakers) 480/277 Vac Three Phase 4-Wire Incoming Power
3	120 Vac Cable (1-P Breakers) 240 Vac Cable (2-P Breakers) 208/120 Three Phase 4-Wire Incoming Power.

Code	Controller Options
0	IntelliTRACE Controllers (Code 3 Solid State Relay)
1	IntelliTRACE Controllers with Communications (Code 3 Solid State Relay)
2	IntelliTRACE Controllers (Code 3C Contactor Control)
3	IntelliTRACE Controllers with Communications (Code 3C Contactor Control)

Code	Ground Fault Monitoring Options
0	None
2	Ground Fault Monitors 240Vac (Includes GFI Illuminated Reset Switch)
3	Ground Fault Monitors 277Vac (Includes GFI Illuminated Reset Switch)
4	Ground Fault Monitors 208Vac (Includes GFI Illuminated Reset Switch)
5	Three 1-Pole Breakers, 120 Vac, 15 Amp Circuit Breakers w/30 mA Ground Fault Equipment Protection
6	Three 1-Pole Breakers, 120 Vac, 20 Amp Circuit Breakers w/30 mA Ground Fault Equipment Protection
7	Three 1-Pole Breakers, 120 Vac, 25 Amp Circuit Breakers w/30 mA Ground Fault Equipment Protection
8	Three 1-Pole Breakers, 120 Vac, 30 Amp Circuit Breakers w/30 mA Ground Fault Equipment Protection
A	Three 1-Pole Breakers, 277 Vac, 15 Amp Circuit Breakers w/30 mA Ground Fault Equipment Protection
B	Three 1-Pole Breakers, 277 Vac, 20 Amp Circuit Breakers w/30 mA Ground Fault Equipment Protection
C	Three 1-Pole Breakers, 277 Vac, 30 Amp Circuit Breakers w/30 mA Ground Fault Equipment Protection
E	Three 2-Pole Breakers, 208/240 Vac, 15 Amp Circuit Breakers w/30 mA Ground Fault Equipment Protection
F	Three 2-Pole Breakers, 208/240 Vac, 20 Amp Circuit Breakers w/30 mA Ground Fault Equipment Protection
G	Three 2-Pole Breakers, 208/240 Vac, 25 Amp Circuit Breakers w/30 mA Ground Fault Equipment Protection
H	Three 2-Pole Breakers, 208/240 Vac, 30 Amp Circuit Breakers w/30 mA Ground Fault Equipment Protection

Code	Enclosure Heater
0	None
1	Thermostat Controlled Enclosure Heater

HTLS -	**3**	**1**	**0**	**2**	**0**	**Typical Model Number**

intelliTRACE®

HTLS

Four-Loop Heat Tracing Line Sensing Control Panel

(cont'd.)

Model

HTLS **IntelliTRACE 40000 Series Line Sensing Heat Trace Panel**

Panel Configuration

cUL and UL Listed Four Loop Line Sensing Temperature/Monitor Heat Trace Panel. Factory pre-wired for quick installation. Includes: Three-Pole Door-Interlocked Disconnect Switch, Solid State Relay or Contactor Control, High or Low Temperature Alarm, Low Current Alarms, On/Off or PID Control, Universal Sensor Inputs, Dual Digital Displays, Terminal Blocks for Field Connections, Loop Standby Mode, NEMA 4 Steel Enclosure (30"H x 24"W x 8"D) for Indoor/Outdoor Applications. Options Include: Ground Fault Monitoring and Selectable Shutdown, GFI Thermal Magnetic Circuit Breakers, Enclosure Heater and RS-485 MODBUS Communications.

Code	Four Loop of Heat Trace Control
4	Solid State Relay Control Per Loop Rated 30 Amps @ 40˚C Ambient
4C	Electromechanical Contactor Control Per Loop Rated 30Amps Per Loop @ 40˚C Ambient

Code	Voltage
1	240 Vac Cable (2-P Breakers) 240 Vac Three Phase Incoming Power
2	240 Vac Cable (10P Breakers) 480/277 Vac Three Phase 4-Wire Incoming Power
3	120 Vac Cable (1-P Breakers) 240 Vac Cable (2-P Breakers) 208/120 Three Phase 4-Wire Power

Code	Controller Options
0	IntelliTRACE Controllers (Code 4 Solid State Relay)
1	IntelliTRACE Controllers with Communications (Code 4 Solid State Relay)
2	IntelliTRACE Controllers (Code 4C Contactor Control)
3	IntelliTRACE Controllers with Communications (Code 4C Contactor Control)

Code	Ground Fault Monitoring Options
0	None
2	Ground Fault Monitors 240Vac (Includes GFI Illuminated Reset Switch)
3	Ground Fault Monitors 277Vac (Includes GFI Illuminated Reset Switch)
4	Ground Fault Monitors 208Vac (Includes GFI Illuminated Reset Switch)
5	Four 1-Pole Breakers, 120 Vac, 15 Amp Circuit Breakers w/30 mA Ground Fault Equipment Protection
6	Four 1-Pole Breakers, 120 Vac, 20 Amp Circuit Breakers w/30 mA Ground Fault Equipment Protection
7	Four 1-Pole Breakers, 120 Vac, 25 Amp Circuit Breakers w/30 mA Ground Fault Equipment Protection
8	Four 1-Pole Breakers, 120 Vac, 30 Amp Circuit Breakers w/30 mA Ground Fault Equipment Protection
A	Four 1-Pole Breakers, 277 Vac, 15 Amp Circuit Breakers w/30 mA Ground Fault Equipment Protection
B	Four 1-Pole Breakers, 277 Vac, 20 Amp Circuit Breakers w/30 mA Ground Fault Equipment Protection
C	Four 1-Pole Breakers, 277 Vac, 30 Amp Circuit Breakers w/30 mA Ground Fault Equipment Protection
E	Four 2-Pole Breakers, 208/240 Vac, 15 Amp Circuit Breakers w/30 mA Ground Fault Equipment Protection
F	Four 2-Pole Breakers, 208/240 Vac, 20 Amp Circuit Breakers w/30 mA Ground Fault Equipment Protection
G	Four 2-Pole Breakers, 208/240 Vac, 25 Amp Circuit Breakers w/30 mA Ground Fault Equipment Protection
H	Four 2-Pole Breakers, 208/240 Vac, 30 Amp Circuit Breakers w/30 mA Ground Fault Equipment Protection

Code	Enclosure Heater
0	None
1	Thermostat Controlled Enclosure Heater

HTLS -	4	1	0	E	0	**Typical Model Number**

intelliTRACE®

HTLSC1D2

Series C1D2 Heat Trace Line Sensing Control Panel

- **Approved for Class 1, Division 2 Groups B, C and D**
- **Solid State Relay Output Rated 30 Amps 40˚C**
- **Universal Inputs**
- **NEMA 4 Enclosure**
- **Ground Fault Alarm**
- **Programmable High/Low Temperature Alarms**
- **Programmable Current Alarm**
- **Optional RS-485 Communications**
- **120, 208, 240, 277 and 480 VAC**

Applications

- Freeze Protection
- Fuel Gas Preheating and Superheating
- Fuel Oil Preheating
- Hydrocarbon and Chemical Product Piping
- Power Generation Plants

Description

The Chromalox HTLSC1D2 series panels are microprocessor based temperature control and monitoring units for heat tracing used in freeze protection and process temperature control applications.

This series of panels can be configured for ambient or line sensing control. The HTLSC1D2 series implement a scaleable design such that they can be configured with or without communications, ground fault monitoring or enclosure heater.

This unique format offers a design that can be tailored both by price and features to meet the most challenging demands in heat trace applications. For example: The HTLSC1D2 series can be networked together via RS-485 MODBUS and the Chromalox Windows based Chromasoft SpecView software package. The optional ground fault monitoring addresses the national electric code requirements and reduces the cost of installing costly ground-fault circuit breakers. In the event of sub-zero temperatures the optional enclosure heater is available. The Chromalox HTLSC1D2 series offers single and dual loop designs and are approved for Class 1 Division 2 Areas.

The HTLSC1D2 series have programmable inputs (thermocouple, RTD, mA, VDC), On/Off or PID control, Auto-tune function, High/Low temperature alarms, current alarm, and sensor failure indication. The heat tracing circuit is switched by a 30 amp solid state relay rated at 40˚C ambient.

The Chromalox HTLSC1D2 series panel comes ready to install and includes control and power wiring terminal blocks for field connections.

Technical Specifications

Area of Use: Class 1 Division 2

Approvals: UL, cUL, CE

Supply Voltage: 120, 208, 240, 277, and 480 Vac.

Ambient Operating Temperature: 32 - 104˚F (0 - 40˚C), -32 - 104˚F (-35.5 - 40˚C) with Optional Enclosure Heater.

Protection: NEMA 4X Fiberglas®

Communications: RS-485 MODBUS

Temperature Sensor Input: J, K, T, E, B, R, S, N, L, PT100, mV, mA, V

Output: Solid State Relay rated 30 amps @ 40˚C.

Current Alarm (Low): 0 - 50 Amps in .1 amp resolution.

Temperature Alarms: Field selectable Dev. High/Low, Dev. Band High/Low, Process Low /High, Latching, Non-Latching.

Control Modes: Field Selectable On/Off, PID, Auto-tune.

Ground Fault Alarm: Adjustable Trip Level 30 - 300mA; Adjustable Trip Delay 0 - 1 Sec.

HTLSC1D2

Series C1D2 Heat Trace Line Sensing Control Panel *(cont'd.)*

Ordering Information

To Order — Complete the Model Number using the Matrix provided.

Note — Due to the nature of Division 1 hazardous location applications consultation with a factory representative is required.

Single Loop Mounting Dimensions

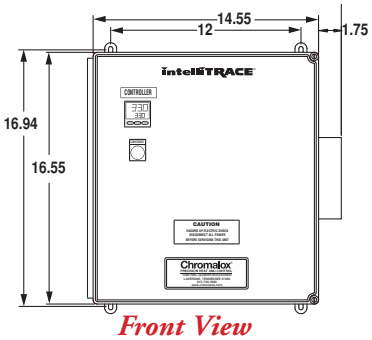

Front View

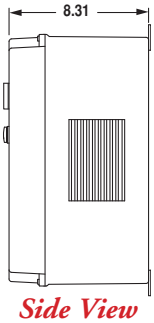

Side View

Dual Loop Mounting Dimensions

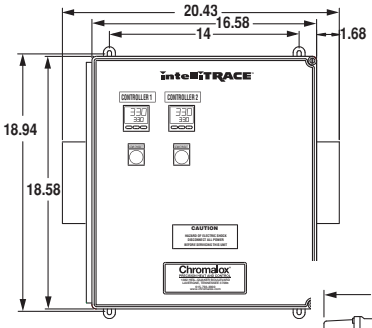

Front View

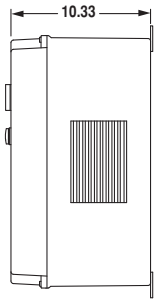

Side View

Single Loop

Model	IntelliTRACE™ 10000 Series Line Sensing Heat Trace Panel

HTLSC1D2 Panel Configuration

cUL, UL and CE Listed Single Loop Line Sensing Temperature/Monitor Heat Trace Panel. Factory pre-wired for quick installation. Includes: Solid State Relay, High or Low Temperature Alarm, Low Current Alarm, On/Off or PID Control, Universal Sensor Inputs, Dual Digital Displays, Terminal Blocks for Field Connections, Remote Interlock, NEMA 4X rated Enclosure (16"H x 14"W x 8"D) for Indoor/Outdoor Applications. Options Include: Ground Fault Monitoring, Digital Communications and Enclosure Heater.

Code	Single Loop Heat Trace Control
1	30 Amp Rating

Code	Voltage
0	120 Vac
1	208 Vac
2	240 Vac
3	277 Vac
4	480 Vac

Code	Controller
0	IntelliTRACE Controllers
1	IntelliTRACE Controllers with Communications

Code	Ground Fault Monitoring
0	None
1	Ground Fault Module (Includes Illuminated Reset switch)

Code	Enclosure Heater
0	None
1	Thermostat Controlled Enclosure Heater

HTLSC1D2	1	0	0	0	0	Typical Model Number

Dual Loop

Model	IntelliTRACE™ 20000 Series Line Dual Loop Sensing Heat Trace Panel

HTLSC1D2 Panel Configuration

cUL, UL and CE Listed Dual Loop Line/Ambient Sensing Temperature/Monitor Heat Trace Panel. Factory pre-wired for quick installation. Includes: Solid State Relay, High or Low Temperature Alarm, Low Current Alarm, On/Off or PID Control, Universal Sensor Inputs, Dual Digital Displays, Terminal Blocks for Field Connections, Remote Interlock, NEMA 4X rated Enclosure (18"H x 16"W x 10"D) for Indoor/Outdoor Applications. Options Include: Ground Fault Monitoring, Digital Communications and Enclosure Heater.

Code	Dual Loop Heat Trace Control
2	30 Amp Rating

Code	Voltage
0	120 Vac
1	208 Vac
2	240 Vac
3	277 Vac
4	480 Vac

Code	Controller
0	IntelliTRACE Controllers
1	IntelliTRACE Controllers with Communications

Code	Ground Fault Monitoring
0	None
1	Ground Fault Module (Includes Illuminated Reset switch)

Code	Enclosure Heater
0	None
1	Thermostat Controlled Enclosure Heater

HTLSC1D2	2	0	0	0	0	Typical Model Number

intelliTRACE®

HTLS

Heat Tracing Line Sensing Control Panel Series 8000/12000/24000

- Color Touchscreen Operator Panel
- Eight/Twelve/Twenty-Four Points of Independent On/Off Control
- NEMA 4 Enclosure
- High/Low Temperature Alarms
- Low Current Alarm with Adjustable Setpoint
- Ground Fault Alarming/Trip
- Open Sensor Alarm
- Common Alarm Output (Re-Ring Feature)
- Load Management
- Internal Power Distribution (Includes Circuit Breakers)
- 120, 240, 480, and 277 Vac
- Process Loop Identification
- Global Programming
- Auto-Cycle Feature
- Current Display
- Failed Sensor Output Setting
- Loop Enable/Disable
- Network Communications
- Hand/Off/Auto Selection

Description

The IntelliTRACE HTLS Series is a microprocessor based Control/Monitoring and Power Management/Distribution system for Heat Trace Applications.

The IntelliTRACE Multi-Channel Heat Trace System provides Alarms for High/Low temperature, continuity, ground fault leakage, and sensor faults. The Advanced Features include a Color Touchscreen Operator Interface Panel that provides simple programming with no keyboards or cryptic labels. The panel displays loop status, alarm conditions and graphics on process temperature, setpoints, and currents.

With the built-in power distribution, the IntelliTRACE multi-loop provides reduced material, installation, and maintenance costs. The load management feature eliminates the need for expensive ground fault breakers, limits inrush current and systematically interrogates all circuits for continuity, ground fault leakage, sensor faults, and temperature alarms.

Technical Specifications

Supply Voltage: 120, 240, 480, and 277Vac, Three-Phase

Operating Environment: 32 – 120°F (0 – 40°C) -30 - 104°F (-34 - 40°C) with enclosure heater option

Communications: RS-485 MODBUS®

Input: RTD 100 Ω Platinum Three-Wire.

Output: Two-Pole Contactors

Maximum Current: 24 Amps/Ckt

Temperature Alarms: High/Low 2°F Deadband Non-Latching

Ground Fault Alarm: Adjustable 25 – 500mA Factory Set @ 30mA

Low Current Alarm: .2 - 24.0 Adjustable

Load Management: 15 sec. Non-Overlap to Reduce Inrush.

Auto-Cycle: Programmable to 720 Hrs (30 days)

Failed Sensor Output Setting: 0-100%

Control Mode: On/Off with adjustable Deadband.

HTLS

Heat Tracing Line Sensing Control Panel Series 8000/12000/24000 *(cont'd.)*

Ordering Information

To Order — *Complete the Model Number using the Matrix provided.*

Model						
HTLS	**IntelliTRACE 8000 Series Line Sensing Heat Trace Panel**					
	Panel Configuration					
	cUL and UL Listed Eight Loop Line Sensing Temperature/Monitor Heat Trace Panel. Factory pre-wired for quick installation. Includes; Two-Pole Contactors, Current Transmitters, High-Low Temperature Alarms, On/Off Control, RTD Sensor Inputs, Ground Fault Indication or Shutdown, Common Alarm Output, Hand/Off/Auto, Loop Enable Disable, Auto Cycle Feature, Color Touch Screen Programming, NEMA 4 rated Enclosure (36"H x 30"W x 8"D) for Indoor/Outdoor Applications. Options Include: Enclosure Heater, Type Z Purge System.					
	CODE	**Eight Independent Loops of Heat Trace Control**				
	8					
		CODE	**Line Voltage**			**Cable Operations Voltage**
		0	120 Vac (Incl. Single-Pole Circuit Brkrs) 208Y/120 Vac 3-Phase, 4-Wire			120 Vac
		1	240 Vac (Incl. Double-Pole Circuit Brkrs) 240 Vac 3-Phase			240 Vac
		2	277 Vac (Incl. Single-Pole Circuit Brkrs) 480Y/277 Vac 3-Phase, 4-Wire			277 Vac
		3	480 Vac (Incl. Double Pole Circuit Brkrs) 480 Vac 3-Phase			480 Vac (MI or CWM)
		4	208 Vac (Incl. Double Pole Circuit Brkrs) 208 Vac Three Phase			208 Vac
			CODE	**Circuit Breaker Rating**		
			1	15 Amp Thermal Magnetic		
			2	20 Amp Thermal Magnetic		
			3	30 Amp Thermal Magnetic		
				CODE	**Enclosure Heater**	
				0	None	
				1	Thermostat Controlled Enclosure Heater	
					CODE	**Pressurization Control System**
					0	None
					1	Type Z for Class I Division II Hazardous Location
HTLS	**8**	**0**	**1**	**0**	**0**	**Typical Model Number**

HTLS

Heat Tracing Line Sensing Control Panel Series 8000/12000/24000 *(cont'd.)*

Ordering Information

To Order — *Complete the Model Number using the Matrix provided.*

Model

HTLS — **IntelliTRACE 12000 Series Line Sensing Heat Trace Panel**

Panel Configuration

cUL and UL Listed Twelve Loop Line Sensing Temperature/Monitor Heat Trace Panel. Factory pre-wired for quick installation. Includes: Two-Pole Contactors, Current Transmitters, High-Low Temperature Alarms, On/Off Control, RTD Sensor Inputs, Ground Fault Indication or Shutdown, Common Alarm Output, Hand/Off/Auto, Loop Enable/Disable, Auto Cycle Feature, Color Touch Screen Programming, NEMA 4 rated Enclosure (48"H x 36"W x 10"D) for Indoor/Outdoor Applications. Options Include: Enclosure Heater, Type Z Purge System.

CODE	Twelve Independent Loops of Heat Trace Control
12	

CODE	Line Voltage	Cable Operations Voltage
0	120 Vac (Incl. Single-Pole Circuit Brkrs) 208Y/120 Vac 3-Phase, 4-Wire	120 Vac
1	240 Vac (Incl. Double-Pole Circuit Brkrs) 240 Vac 3-Phase	240 Vac
2	277 Vac (Incl. Single-Pole Circuit Brkrs) 480Y/277 Vac 3-Phase, 4-Wire	277 Vac
3	480 Vac (Incl. Double Pole Circuit Brkrs) 480 Vac 3-Phase	480 Vac (MI or CWM)
4	208 Vac (Incl. Double Pole Circuit Brkrs) 208 Vac Three Phase	208 Vac

CODE	Circuit Breaker Rating
1	15 Amp Thermal Magnetic
2	20 Amp Thermal Magnetic
3	30 Amp Thermal Magnetic

CODE	Enclosure Heater
0	None
1	Thermostat Controlled Enclosure Heater

CODE	Pressurization Control System
0	None
1	Type Z for Class I Division II Hazardous Location

HTLS	12	0	1	0	0	**Typical Model Number**

HTLS

Heat Tracing Line Sensing Control Panel Series 8000/12000/24000 *(cont'd.)*

Ordering Information

To Order — *Complete the Model Number using the Matrix provided.*

Model	
HTLS	**IntelliTRACE 24000 Series Line Sensing Heat Trace Panel**

Panel Configuration

cUL and UL Listed Twenty-Four Loop Line Sensing Temperature/Monitor Heat Trace Panel. Factory pre-wired for quick installation. Includes: Two-Pole Contactors, Current Transmitters, High-Low Temperature Alarms, On/Off Control, RTD Sensor Inputs, Ground Fault Indication or Shutdown, Common Alarm Output, Hand/Off/Auto, Loop Enable/Disable, Auto Cycle Feature, Color Touch Screen Programming, NEMA 4 rated Enclosure (62"H x 60"W x 12"D) for Indoor/Outdoor Applications. Options Include: Enclosure Heater, Type Z Purge System.

CODE	Twenty-Four Independent Loops of Heat Trace Control
24	

CODE	Line Voltage	Cable Operations Voltage
0	120 Vac (Incl. Single-Pole Circuit Brkrs) 208Y/120 Vac 3-Phase, 4-Wire	120 Vac
1	240 Vac (Incl. Double-Pole Circuit Brkrs) 240 Vac 3-Phase	240 Vac
2	277 Vac (Incl. Single-Pole Circuit Brkrs) 480Y/277 Vac 3-Phase, 4-Wire	277 Vac
3	480 Vac (Incl. Double Pole Circuit Brkrs) 480 Vac 3-Phase	480 Vac (MI or CWM)
4	208 Vac (Incl. Double Pole Circuit Brkrs) 208 Vac Three Phase	208 Vac

CODE	Circuit Breaker Selection
1	15 Amp Thermal Magnetic
2	20 Amp Thermal Magnetic
3	30 Amp Thermal Magnetic

CODE	Enclosure Heater
0	None
1	Thermostat Controlled Enclosure Heater

CODE	Pressurization Control System
0	None
1	Type Z for Class I Division II Hazardous Location

HTLS	24	0	1	0	0	**Typical Model Number**

intelliTRACE®

HTAS

Heat Tracing Ambient Sensing Control Panel Series 8000/12000/24000

- **Color Touchscreen Operator Panel**
- **Eight/Twelve/Twenty-Four Points of Power Control**
- **Optional Ambient Sensing Controller**
- **NEMA 4 Enclosure**
- **Low Current Alarm with Adjustable Setpoint**
- **Ground Fault Alarming/Trip**
- **Common Alarm Output (Re-Ring Feature)**
- **Load Management**
- **Process Loop Identification**
- **Internal Power Distribution (Includes Circuit Breakers)**
- **120, 240, 480, and 277 Vac**
- **Auto-Cycle Feature**
- **Current Display**
- **Network Communications**
- **Hand/Off/Auto Selection**

Description

The IntelliTRACE HTAS Series is a microprocessor based Monitoring and Power Management/Distribution system for Heat Trace Applications.

The IntelliTRACE Multi-Channel Heat Trace System provides Alarms for Continuity, and Ground Fault Leakage. The Advanced Features include a Color Touchscreen Operator Interface Panel that provides simple programming with no keyboards or cryptic labels. The panel displays loop status, alarm conditions and graphics on currents.

With the built-in power distribution, the IntelliTRACE multi-loop provides **reduced material, installation, and maintenance costs.** The load management feature eliminates the need for expensive ground fault breakers, limits inrush current and systematically interrogates all circuits for continuity and ground fault leakage.

Technical Specifications

Supply Voltage: 120, 240, 480, and 277Vac, Three-Phase

Operating Environment: 32 – 120°F (0 – 40°C) -30 - 104˚F (-34 - 40˚C) with enclosure heater option

Communications: RS-485 MODBUS®

Output: Two-Pole Contactors

Maximum Current: 24 Amps/Ckt

Ground Fault Alarm: Adjustable 25 – 500mA Factory Set @ 30mA

Low Current Alarm: .2 - 24.0 Adjustable

Load Management: 15 sec. Non-Overlap to Reduce Inrush.

Auto-Cycle: Programmable to 720 Hrs (30 days)

Control Mode: Optional Ambient Sensing Controller.

HTAS

Heat Tracing Ambient Sensing Control Panel Series 8000/12000/24000 *(cont'd.)*

Ordering Information

To Order — *Complete the Model Number using the Matrix provided.*

Model	
HTAS	**IntelliTRACE 8000 Series Ambient Sensing Heat Trace Panel**

Panel Configuration

cUL and UL Listed Eight Loop Ambient Sensing Temperature/Monitor Heat Trace Panel. Factory pre-wired for quick installation. Includes: Two-Pole Contactors, Current Transmitters, Ground Fault INdication or Shutdown, Continuity Alarms, Common Alarm Output, Loop Enable/ Disable, Hand/Off/Auto, Auto Cycle Feature, Thermal Magnetic Circuit Breakers, Color Touch Screen Programming, NEMA 4 rated Enclosure (36" x 30"W x 8"D) for Indoor/Outdoor Applications. Options Include: Enclosure Heater, Type Z Purge System and Optional Ambient Temperature Sensing Controllers.

CODE	Eight Zones of Monitored Power Control
8	

CODE	Line Voltage	Cable Operations Voltage
0	120 Vac (Incl. Single-Pole Circuit Brkrs) 208Y/120 Vac 3-Phase, 4-Wire	120 Vac
1	240 Vac (Incl. Double-Pole Circuit Brkrs) 240 Vac 3-Phase	240 Vac
2	277 Vac (Incl. Single-Pole Circuit Brkrs) 480Y/277 Vac 3-Phase, 4-Wire	277 Vac
3	480 Vac (Incl. Double Pole Circuit Brkrs) 480 Vac 3-Phase	480 Vac (MI or CWM)
4	208 Vac (Incl. Double Pole Circuit Brkrs) 208 Vac Three Phase	208 Vac

CODE	Circuit Breaker Selection
1	15 Amp Thermal Magnetic
2	20 Amp Thermal Magnetic
3	30 Amp Thermal Magnetic

CODE	Enclosure Heater
0	None
1	Thermostat Controlled Enclosure Heater

CODE	Ambient Sensing Controller
0	None (Remote Mounted).
1	1601E-11030
2	1603E-11030

CODE	Pressurization Control System
0	None
1	Type Z for Class I Division II Hazardous Location

HTAS	8	0	1	0	0	0	**Typical Model Number**

HTAS

Heat Tracing Ambient Sensing Control Panel Series 8000/12000/24000 *(cont'd.)*

Ordering Information

To Order — *Complete the Model Number using the Matrix provided.*

Model	
HTAS	**IntelliTRACE 12000 Ambient Sensing Heat Trace Panel**

Panel Configuration

cUL and UL Listed Twelve Loop Ambient Sensing Temperature/Monitor Heat Trace Panel. Factory pre-wired for quick installation. Includes: Two-Pole Contactors, Current Transmitters, Ground Fault Indication or Shutdown, Continuity Alarms, Common Alarm Output, Loop Enable/Disable, Hand/Off/Auto, Auto Cycle Feature, Thermal Magnetic Circuit Breakers, Color Touch Screen Programming, NEMA 4 rated Enclosure(48" x 36"W x 10"D) for Indoor/Outdoor Applications. Options Include: Enclosure Heater, Type Z PUrge System and Optional AmbientTemperature Sensing Controllers.

CODE	Twelve Zones of Monitored Power Control
12	

CODE	Line Voltage	Cable Operations Voltage
0	120 Vac (Incl. Single-Pole Circuit Brkrs) 208Y/120 Vac 3-Phase, 4-Wire	120 Vac
1	240 Vac (Incl. Double-Pole Circuit Brkrs) 240 Vac 3-Phase	240 Vac
2	277 Vac (Incl. Single-Pole Circuit Brkrs) 480Y/277 Vac 3-Phase, 4-Wire	277 Vac
3	480 Vac (Incl. Double Pole Circuit Brkrs) 480 Vac 3-Phase	480 Vac (MI or CWM)
4	208 Vac (Incl. Double Pole Circuit Brkrs) 208 Vac Three Phase	208 Vac

CODE	Circuit Breaker Rating
1	15 Amp Thermal Magnetic
2	20 Amp Thermal Magnetic
3	30 Amp Thermal Magnetic

CODE	Enclosure Heater
0	None
1	Thermostat Controlled Enclosure Heater

CODE	Ambient Sensing Controller
0	None (Remote Mounted)
1	1601E-11030
2	1603E-11030

CODE	Pressurization Control System
0	None
1	Type Z for Class I Division II Hazardous Location

HTAS	12	0	1	0	0	0	Typical Model Number

HTAS

Heat Tracing Ambient Sensing Control Panel Series 8000/12000/24000 *(cont'd.)*

Ordering Information

To Order — *Complete the Model Number using the Matrix provided.*

Model	
HTAS	**IntelliTRACE 24000 Series Ambient Sensing Heat Trace Panel**

Panel Configuration

cUL and UL Listed Twenty-Four Loop Ambient Sensing Temperature/Monitor Heat Trace Panel. Factory pre-wired for quick installation. Includes: Two-Pole Contactors, Current Transmitters, Ground Fault Indication or Shutdown, Continuity Alarms, Common Alarm Output, Loop Enable/Disable, Hand/Off/Auto, Auto Cycle Feature, Thermal Magnetic Circuit Breakers, Color Touch Screen Programming, NEMA 4 rated Enclosure (62"x 60"W x 12"D) for Indoor/Outdoor Applications. Options Include: Enclosure Heater, Type Z Purge System and Optional Ambient Temperature Sensing Controllers.

CODE	Twenty-Four Zones of Monitored Power Control
24	

CODE	Line Voltage	Cable Operations Voltage
0	120 Vac (Incl. Single-Pole Circuit Brkrs) 208Y/120 Vac 3-Phase, 4-Wire	120 Vac
1	240 Vac (Incl. Double-Pole Circuit Brkrs) 240 Vac 3-Phase	240 Vac
2	277 Vac (Incl. Single-Pole Circuit Brkrs) 480Y/277 Vac 3-Phase, 4-Wire	277 Vac
3	480 Vac (Incl. Double Pole Circuit Brkrs) 480 Vac 3-Phase	480 Vac (MI or CWM)
4	208 Vac (Incl. Double Pole Circuit Brkrs) 208 Vac Three Phase	208 Vac

CODE	Circuit Breaker Rating
1	15 Amp Thermal Magnetic
2	20 Amp Thermal Magnetic
3	30 Amp Thermal Magnetic

CODE	Enclosure Heater
0	None
1	Thermostat Controlled Enclosure Heater

CODE	Ambient Sensing Controller
0	None (Remote Mounted)
1	1601E-11030
2	1603E-11030

CODE	Pressurization Control System
0	None
1	Type Z for Class I Division II Hazardous Location

HTAS	**24**	**0**	**1**	**0**	**0**	**0**	**Typical Model Number**

weatherTRACE™

Freeze Protection Heat Trace Panels

- **Standard NEMA 4 Enclosures**
- **NEMA 4X Stainless Steel Enclosure Option**
- **Hand/Off/Auto Selector Switch**
- **12, 18, 20, 30, and 42 Position Panelboards**
- **15, 25, 30, and 40 Amp Single-pole and Double-pole 30 mA Ground Fault Thermal-Magnetic Circuit Breakers**
- **100 and 225 Amp Main Bus**
- **Single-phase 120/240 Vac**
- **Three-phase 120/208 Vac 4-Wire**
- **Three-phase 277 Vac 4-Wire**
- **100 and 250 Amp Main Disconnect Switch Option**
- **Ambient and Line Sensing Control**
- **WeatherTrace Sentinel Monitoring with Common Alarm and Re-Ring Feature***
- **Z-Purge Pressurization System for Class 1, Division 2 Option**
- **Enclosure Heater Option**
- **UL and cUL Third Party Approvals**

* The re-ring feature allows the WeatherTrace panel to communicate additional alarm condidtions in the system by momentarily clearing and resetting the alarm output contact. The customer's monitoring device such as a PLC or DCS would interpret this condition to alert the operators of an additional alarm occurring.

FPASM Model Shown

Description

The Chromalox FPAS, FPLS, FPASM, and FPLSM series freeze protection heat trace panels offer power-distribution, ground-fault protection, individual circuit alarming, line and ambient sensing control.

The panels are standard housed NEMA 4 enclosures for indoor/outdoor applications. NEMA 4X 304 stainless steel enclosures may be selected as an option for more harsh environments.

The standard models are available in 12, 18, 20, 30, and 42 position panelboards with 100 and 225 amp bus ratings in Single and Three-Phase configurations.

Branch circuit breakers are available in 20, 25, 30, and 40 amp single-pole and two-pole configurations with 30 mA ground-fault equipment protection.

FPAS – Freeze Protection Ambient Sensing Series

The FPAS series controls groups of heat trace circuits with an external controller/thermostat.

The FPAS series requires external ambient sensing control or thermostats. Chromalox recommended On/Off controllers include: RTAS, RTAS-EP, B100, E100 or a panel door mounted 1601E microprocessor controller.

The FPAS may be operated in two modes; automatically with the external controller, or in manual override via the Hand/Off/Auto selector switch.

FPLS – Freeze Protection Line Sensing Monitor Series

The FPLS series controls heat trace lines with individual Chromalox RTBC, RTBC-EP, E-100 or E121 pipe line sensing controls. Multiple sensors should be used to control the individual circuits or may be gauged based on the application and amperage.

FPASM – Freeze Protection Ambient Sensing Monitor Series

The FPASM series controls groups of heat trace circuits with an external controller/thermostat.

The FPASM series require exernal ambient sensing control or thermostats. Chromalox recommended On/Off controllers include: RTAS, RTAS-EP, B100, E100 or a panel door mounted 1601E microprocessor controller.

The FPASM may be operated in two modes; automatically with the external controller or in manual override via the Hand/Off/Auto selector switch.

The FPASM WeatherTrace Sentinel continually monitors the supply voltage to each individual heat trace circuit without the need for additional staff. Loss of voltage or a ground fault condition will trigger an automatic alarm condition, alerting plant personnel of critical process problems and reducing downtime. An annunciator panel then identifies the faulted zone and a Common Alarm is activated with the re-ring feature.*

FPLSM – Freeze Protection Line Sensing Monitor Series

The FPLSM series controls heat trace lines with individual Chromalox RTBC, RTBC-EP, E100 or E121 pipe line sensing controls. Multiple sensors should be used to control the individual circuits or may be gauged based on the application and amperage.

The FPLSM WeatherTrace Sentinel continually monitors the supply voltage to each individual heat trace circuit without the need for additional staff. Loss of voltage or a ground fault condition triggers an automatic alarm condition, alerting plant personnel of critical process problems and reducing downtime. An annunciator panel then identifies the faulted zone and a Common Alarm is activated with the re-ring feature.*

weatherTRACE™

Freeze Protection Heat Trace Panels *(cont'd.)*

Specifications

Power Source	120/240 Vac Single Phase 120/208 Vac Three-Phase 4-Wire 277/480 Vac Three-Phase 4-Wire
Ambient Operating Temperature	32˚F to 122˚F (without enclosure heater option)
Field Wire Size	14 - 18 AWG (15 - 30 Amp C.B), 8 - 4 AWG (40 Amp C.B)
Ground Fault Breaker Type	30mA Ground Fault Equipment Protection
Enclosure	NEMA 4 or NEMA 4X 304 Stainles Steel (option)
Main Bus Size	100 Amp and 225 Amp
Main Breaker Size	100 Amp Two-Pole Main Disconnect Switch with through Door Rotary Handle 250 Amp Three-Pole Main Disconnect Switch with through Door Rotary Handle
Pressurization System	Type Z Purge Pressurization System for Class 1 Division 2 Area
Approvals	UL and cUL

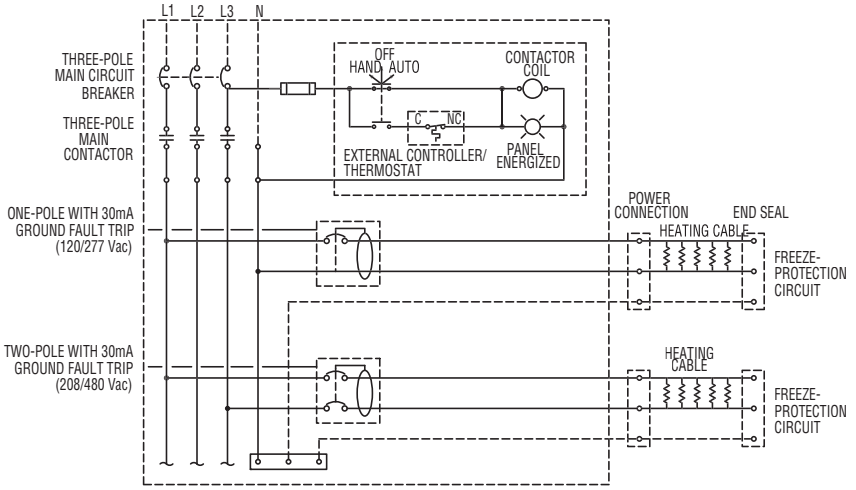

* EXTERNAL CONTROLLER/THERMOSTAT SOLD SEPARATELY

Ambient Sensing
Three Phase
208/120 4-Wire or 480/277 4-Wire

Line Sensing
Single Phase
240/120

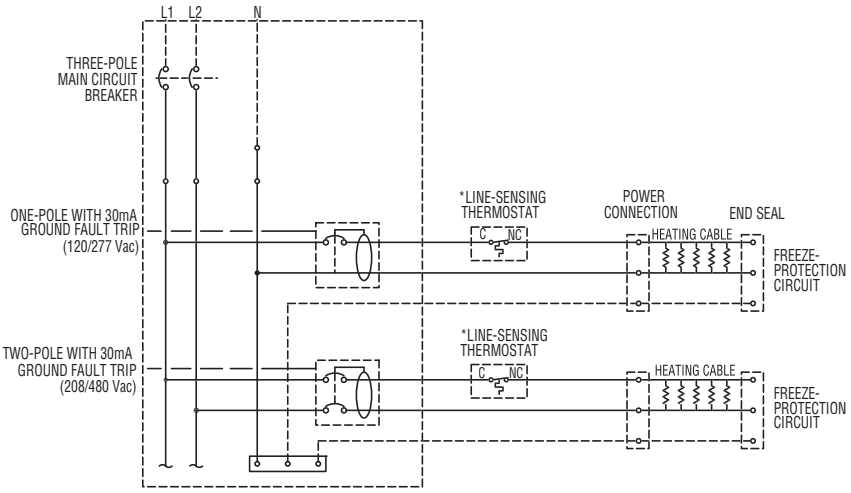

*EXTERNAL CONTROLLER/THERMOSTAT SOLD SEPARATELY

weatherTRACE™

Freeze Protection Heat Trace Panels *(cont'd.)*

Ordering Information

To Order — *Complete the Model Number using the Matrix provided.*

Model	240/120 Vac Single-Phase, 208/120 Vac Three-Phase 4-Wire
FPAS	FPAS Series Ambient Sensing Heat Trace Panels are designed for use in industrial Freeze Protection and Snow Melt applications. The Chromalox FPAS series offers the following standard features: NEMA 4 enclosure, Hand/Off/Auto Selector Switch, Load Energized Indicator Lamp, Main Power On Lamp, Main Contactor, and Thermal Magnetic Branch Circuit Breakers with 30 mA Ground Fault Equipment Protection. Options include: NEMA 4X 304 Stainless Steel Enclosures, Main Disconnect Switch, Remote or Local Ambient Temperature Controller, Enclosure Heater, and Type Z Pressurization System. The FPAS series panels have UL and cUL Third Party Approvals.

Code	Panelboard	Available Breaker Poles
12	12 Positions (100 Amp Main Rating)	(12) 1-pole breakers or (6) 2-pole Breakers
20	20 Positions (100 Amp Main Rating)	(20) 1-pole breakers or (10) 2-pole Breakers
30	30 Positions (225 Amp Main Rating)	(30) 1-pole breakers or (14) 2-pole Breakers
42	42 Positions (225 Amp Main Rating)	(42) 1-pole breakers or (20) 2-pole Breakers

Code	Power Source
1	1 Phase Power, 240/120 Vac (Code 12 & 20 Only)
2	3 Phase Power, 208/120 Vac 4-Wire (Code 30 & 42 Only)

Code	Enclosure
1	NEMA 4 Single-Door, Wall-Mount Steel Enclosure
2	NEMA 4X 304 Stainless Steel Wall-Mount Enclosure; 48"H x 36"W x 10"D (Code 12 & 20)
3	NEMA 4X 304 Stainless Steel Wall-Mount Enclosure; 60"H x 36"W x 10"D (Code 30 & 42)

Code	Branch Circuit Breaker Selection (DO NOT EXCEED MAIN RATING)
1(*)	1-Pole Breaker, 120 Vac, 15 Amps, 30 mA Ground Fault Equipment Protection
2(*)	1-Pole Breaker, 120 Vac, 20 Amps, 30 mA Ground Fault Equipment Protection
3(*)	1-Pole Breaker, 120 Vac, 25 Amps, 30 mA Ground Fault Equipment Protection
4(*)	1-Pole Breaker, 120 Vac, 30 Amps, 30 mA Ground Fault Equipment Protection
5(*)	2-Pole Breaker, 120/240 Vac, 15 Amps, 30 mA Ground Fault Equipment Protection
6(*)	2-Pole Breaker, 120/240 Vac, 20 Amps, 30 mA Ground Fault Equipment Protection
7(*)	2-Pole Breaker, 120/240 Vac, 25 Amps, 30 mA Ground Fault Equipment Protection
8(*)	2-Pole Breaker, 120/240 Vac, 30 Amps, 30 mA Ground Fault Equipment Protection
9(*)	2-Pole Breaker, 120/240 Vac, 40 Amps, 30 mA Ground Fault Equipment Protection

Code	Main Disconnect Switch Selection
0	None
1	100 Amp with 65k Fault Protection (Code 12 & 20 Only)
2	250 Amp with 65k Fault Protection (Code 30 & 42 Only)

Code	Ambient Controller
0	None (Customer Supplied)
1	RTAS Ambient Sensing Thermostat (Remote Mounted)
2	RTAS-EP Ambient Sensing Thermostat (Remote Mounted Division 2 Hazardous Area)
3	B-100 NEMA 4X Ambient Sensing Thermostat (Remote Mounted)
4	E-100-EP Ambient Sensing Thermostat (Remote Mounted Division 1 Hazardous Area)
5	1601E-11030 1/16 DIN Temperature Controller (Panel Door Mounted)
6	LCD-1 Snow Switch (Remote Mounted)

Code	Cabinet Heater
0	None
1	Thermostat Controlled Enclosure Heater

Code	Pressurization Control System
0	None
1	Type Z Class 1, Division 2

FPAS	42	2	1	1(*)	1	1	0	0	Typical Model Number

Technical Notes:
NEMA 4 Enclosure Dimensions:
Codes: 12 & 20 – 48"H x 36"W x 10"D Single Door, Wall Mount Enclosure
Codes: 30 & 42 – 60"H x 36"W x 10"D Single Door, Wall Mount Enclosure
(*) Enter number of circuit breakers in parenthesis

weatherTRACE™

Freeze Protection Heat Trace Panels *(cont'd.)*

Ordering Information

To Order — *Complete the Model Number using the Matrix provided.*

Model	240/120 Vac Single-Phase, 208/120 Vac Three-Phase 4-Wire
FPLS	FPLS Series Line Sensing Heat Trace Panels are designed for use in industrial Freeze Protection and Snow Melt applications. The Chromalox FPLS series offers the following standard features: NEMA 4 enclosure, Main Power On Lamp and Thermal Magnetic Branch Circuit Breakers with 30 mA Ground Fault Equipment Protection. Options include: NEMA 4X 304 Stainless Steel Enclosures, Main Disconnect Switch, Enclosure Heater, and Type Z Pressurization System. The FPLS series panels have UL and cUL Third Party Approvals.

Code	Panelboard	Available Breaker Poles
12	12 Positions (100 Amp Main Rating)	(12) 1-pole breakers or (6) 2-pole Breakers
20	20 Positions (100 Amp Main Rating)	(20) 1-pole breakers or (10) 2-pole Breakers
30	30 Positions (225 Amp Main Rating)	(30) 1-pole breakers or (14) 2-pole Breakers
42	42 Positions (225 Amp Main Rating)	(42) 1-pole breakers or (20) 2-pole Breakers

Code	Power Source
1	1 Phase Power, 240/120 Vac (Code 12 & 20 Only)
2	3 Phase Power, 208/120 Vac 4-Wire (Code 30 & 42 Only)

Code	Enclosure
1	NEMA 4 Single-Door, Wall-Mount Steel Enclosure
2	NEMA 4X 304 Stainless Steel Wall-Mount Enclosure; 48"H x 36"W x 10"D (Code 12 & 20)
3	NEMA 4X 304 Stainless Steel Wall-Mount Enclosure; 60"H x 36"W x 10"D (Code 30 & 42)

Code	Branch Circuit Breaker Selection (DO NOT EXCEED MAIN RATING)
1(*)	1-Pole Breaker, 120 Vac, 15 Amps, 30 mA Ground Fault Equipment Protection
2(*)	1-Pole Breaker, 120 Vac, 20 Amps, 30 mA Ground Fault Equipment Protection
3(*)	1-Pole Breaker, 120 Vac, 25 Amps, 30 mA Ground Fault Equipment Protection
4(*)	1-Pole Breaker, 120 Vac, 30 Amps, 30 mA Ground Fault Equipment Protection
5(*)	2-Pole Breaker, 120/240 Vac, 15 Amps, 30 mA Ground Fault Equipment Protection
6(*)	2-Pole Breaker, 120/240 Vac, 20 Amps, 30 mA Ground Fault Equipment Protection
7(*)	2-Pole Breaker, 120/240 Vac, 25 Amps, 30 mA Ground Fault Equipment Protection
8(*)	2-Pole Breaker, 120/240 Vac, 30 Amps, 30 mA Ground Fault Equipment Protection

Code	Main Disconnect Switch Selection
0	None
1	100 Amp with 65k Fault Protection (Code 12 & 20 Only)
2	250 Amp with 65k Fault Protection (Code 30 & 42 Only)

Code	Cabinet Heater
0	None
1	Thermostat Controlled Enclosure Heater

Code	Pressurization Control System
0	None
1	Type Z Class 1, Division 2

FPLS	42	2	1	1(*)	1	1	0	Typical Model Number

Technical Notes:
NEMA 4 Enclosure Dimensions:
Codes: 12 & 20 – 48"H x 36"W x 10"D Single Door, Wall Mount Enclosure
Codes: 30 & 42 – 60"H x 36"W x 10"D Single Door, Wall Mount Enclosure
(*) Enter number of circuit breakers in parenthesis

weatherTRACE™

Freeze Protection Heat Trace Panels *(cont'd.)*

Ordering Information

To Order — *Complete the Model Number using the Matrix provided.*

Model	240/120 Vac Single-Phase, 208/120 Vac Three-Phase 4-Wire
FPASM	FPASM Series Ambient Sensing Heat Trace Panels are designed for use in industrial Freeze Protection and Snow Melt applications. The Chromalox FPASM series offers the following standard features: NEMA 4 enclosure, Hand/Off/Auto Selector Switch, Load Energized Indicator Lamp, Main Power On Lamp, Main Contactor, and Thermal Magnetic Branch Circuit Breakers with 30 mA Ground Fault Equipment Protection. The FPASM WeatherTrace Sentinel continually monitors the supply voltage to each individual heat trace circuit. Loss of voltage or a ground fault condition triggers and automatic alarm condition to an annunciator panel which identifies the faulted zone and a common alarm is activated with the re-ring feature. Options include: NEMA 4X 304 Stainless Steel Enclosures, Main Disconnect Switch, Remote or Local Ambient Temperature Controller, Enclosure Heater, and Type Z Pressurization System. The FPASM series panels have UL and cUL Third Party Approvals.

Code	Panelboard	Available Breaker Poles
12	12 Positions (100 Amp Main Rating)	(12) 1-pole breakers or (6) 2-pole Breakers
20	20 Positions (100 Amp Main Rating)	(20) 1-pole breakers or (10) 2-pole Breakers
30	30 Positions (225 Amp Main Rating)	(30) 1-pole breakers or (14) 2-pole Breakers
42	42 Positions (225 Amp Main Rating)	(40) 1-pole breakers or (20) 2-pole Breakers

Code	Power Source
1	1 Phase Power, 240/120 Vac (Code 12 & 20 Only)
2	3 Phase Power, 208/120 Vac 4-Wire (Code 30 & 42 Only)

Code	Enclosure
1	NEMA 4 Single-Door, Wall-Mount Steel Enclosure
2	NEMA 4X 304 Stainless Steel Wall-Mount Enclosure; 48"H x 36"W x 10"D (Code 12 & 20)
3	NEMA 4X 304 Stainless Steel Wall-Mount Enclosure; 60"H x 36"W x 10"D (Code 30 & 42)

Code	Branch Circuit Breaker Selection (DO NOT EXCEED MAIN RATING)
1(*)	1-Pole Breaker, 120 Vac, 15 Amps, 30 mA Ground Fault Equipment Protection
2(*)	1-Pole Breaker, 120 Vac, 20 Amps, 30 mA Ground Fault Equipment Protection
3(*)	1-Pole Breaker, 120 Vac, 25 Amps, 30 mA Ground Fault Equipment Protection
4(*)	1-Pole Breaker, 120 Vac, 30 Amps, 30 mA Ground Fault Equipment Protection
5(*)	2-Pole Breaker, 120/240 Vac, 15 Amps, 30 mA Ground Fault Equipment Protection
6(*)	2-Pole Breaker, 120/240 Vac, 20 Amps, 30 mA Ground Fault Equipment Protection
7(*)	2-Pole Breaker, 120/240 Vac, 25 Amps, 30 mA Ground Fault Equipment Protection
8(*)	2-Pole Breaker, 120/240 Vac, 30 Amps, 30 mA Ground Fault Equipment Protection
9(*)	2-Pole Breaker, 120/240 Vac, 40 Amps, 30 mA Ground Fault Equipment Protection

Code	Main Disconnect Switch Selection
0	None
1	100 Amp with 65k Fault Protection (Code 12 & 20 Only)
2	250 Amp with 65k Fault Protection (Code 30 & 42 Only)

Code	Ambient Controller
0	None (Customer Supplied)
1	RTAS Ambient Sensing Thermostat (Remote Mounted)
2	RTAS-EP Ambient Sensing Thermostat (Remote Mounted Division 2 Hazardous Area)
3	B-100 NEMA 4X Ambient Sensing Thermostat (Remote Mounted)
4	E-100-EP Ambient Sensing Thermostat (Remote Mounted Division 1 Hazardous Area)
5	1601E-11030 1/16 DIN Temperature Controller (Panel Door Mounted)
6	LCD-1 Snow Switch (Remote Mounted)

Code	Cabinet Heater
0	None
1	Thermostat Controlled Enclosure Heater

Code	Pressurization Control System
0	None
1	Type Z Class 1, Division 2

FPASM	**42**	**2**	**1**	**1(*)**	**1**	**1**	**0**	**0**	**Typical Model Number**

Technical Notes:
NEMA 4 Enclosure Dimensions:
Codes: 12 & 20 – 48"H x 36"W x 10"D Single Door, Wall Mount Enclosure
Codes: 30 & 42 – 60"H x 36"W x 10"D Single Door, Wall Mount Enclosure
(*) Enter number of circuit breakers in parenthesis

weatherTRACE™

Freeze Protection Heat Trace Panels *(cont'd.)*

Ordering Information

To Order — *Complete the Model Number using the Matrix provided.*

Model	240/120 Vac Single-Phase, 208/120 Vac Three-Phase 4-Wire
FPLSM	FPLSM Series Line Sensing Heat Trace Panels are designed for use in industrial Freeze Protection and Snow Melt applications. The Chromalox FPLSM series offers the following standard features: NEMA 4 enclosure, Main Power On Lamp, and Thermal Magnetic Branch Circuit Breakers with 30 mA Ground Fault Equipment Protection. The FPLSM WeatherTrace Sentinel continually monitors the supply voltage to each individual heat trace circuit. Loss of voltage or a ground fault condition triggers and automatic alarm condition to an annunciator panel which identifies the faulted zone and a common alarm is activated with the re-ring feature. Options include: NEMA 4X 304 Stainless Steel Enclosures, Main Disconnect Switch, Enclosure Heater, and Type Z Pressurization System. The FPLSM series panels have UL and cUL Third Party Approvals.

Code	Panelboard	Available Breaker Poles
12	12 Positions (100 Amp Main Rating)	(12) 1-pole breakers or (6) 2-pole Breakers
20	20 Positions (100 Amp Main Rating)	(20) 1-pole breakers or (10) 2-pole Breakers
30	30 Positions (225 Amp Main Rating)	(30) 1-pole breakers or (14) 2-pole Breakers
42	42 Positions (225 Amp Main Rating)	(40) 1-pole breakers or (20) 2-pole Breakers

Code	Power Source
1	1 Phase Power, 240/120 Vac (Code 12 & 20 Only)
2	3 Phase Power, 208/120 Vac 4-Wire (Code 30 & 42 Only)

Code	Enclosure
1	NEMA 4 Single-Door, Wall-Mount Steel Enclosure
2	NEMA 4X 304 Stainless Steel Wall-Mount Enclosure; 48"H x 36"W x 10"D (Code 12 & 20)
3	NEMA 4X 304 Stainless Steel Wall-Mount Enclosure; 60"H x 36"W x 10"D (Code 30 & 42)

Code	Branch Circuit Breaker Selection (DO NOT EXCEED MAIN RATING)
1(*)	1-Pole Breaker, 120 Vac, 15 Amps, 30 mA Ground Fault Equipment Protection
2(*)	1-Pole Breaker, 120 Vac, 20 Amps, 30 mA Ground Fault Equipment Protection
3(*)	1-Pole Breaker, 120 Vac, 25 Amps, 30 mA Ground Fault Equipment Protection
4(*)	1-Pole Breaker, 120 Vac, 30 Amps, 30 mA Ground Fault Equipment Protection
5(*)	2-Pole Breaker, 120/240 Vac, 15 Amps, 30 mA Ground Fault Equipment Protection
6(*)	2-Pole Breaker, 120/240 Vac, 20 Amps, 30 mA Ground Fault Equipment Protection
7(*)	2-Pole Breaker, 120/240 Vac, 25 Amps, 30 mA Ground Fault Equipment Protection
8(*)	2-Pole Breaker, 120/240 Vac, 30 Amps, 30 mA Ground Fault Equipment Protection

Code	Main Disconnect Switch Selection
0	None
1	100 Amp with 65k Fault Protection (Code 12 & 20 Only)
2	250 Amp with 65k Fault Protection (Code 30 & 42 Only)

Code	Cabinet Heater
0	None
1	Thermostat Controlled Enclosure Heater

Code	Pressurization Control System
0	None
1	Type Z Class 1, Division 2

FPLSM	**42**	**2**	**1**	**1(*)**	**1**	**1**	**0**	**Typical Model Number**

Technical Notes:
NEMA 4 Enclosure Dimensions:
Codes: 12 & 20 – 48"H x 36"W x 10"D Single Door, Wall Mount Enclosure
Codes: 30 & 42 – 60"H x 36"W x 10"D Single Door, Wall Mount Enclosure
(*) Enter number of circuit breakers in parenthesis

weatherTRACE™

Freeze Protection Heat Trace Panels *(cont'd.)*

Ordering Information

To Order — *Complete the Model Number using the Matrix provided.*

Model	277 Vac 4-Wire
FPLS	FPLS Series Line Sensing Heat Trace Panels are designed for use in industrial Freeze Protection and Snow Melt applications. The Chromalox FPLS series offers the following standard features: NEMA 4 enclosure, Main Power On Lamp, and Thermal Magnetic Branch Circuit Breakers with 30 mA Ground Fault Equipment Protection. Options include: NEMA 4X 304 Stainless Steel Enclosures, Main Disconnect Switch, Enclosure Heater, and Type Z Pressurization System. The FPLS series panels have UL and cUL Third Party Approvals.

Code	Panelboard	Available Breaker Poles
181	18 Positions (100 Amp Main Rating)	(8) 1-pole breakers
301	30 Positions (100 Amp Main Rating)	(14) 1-pole breakers
421	42 Positions (100 Amp Main Rating)	(20) 1-pole breakers
302	30 Positions (225 Amp Main Rating)	(14) 1-pole breakers
422	42 Positions (225 Amp Main Rating)	(20) 1-pole breakers

Code	Power Source
1	3 Phase Power, 277/480 Vac 4-Wire

Code	Enclosure
1	NEMA 4 Single-Door, Wall-Mount Steel Enclosure
2	NEMA 4X 304 Stainless Steel Wall-Mount Enclosure; 48"H x 36"W x 10"D (Code 181, 301 & 302)
3	NEMA 4X 304 Stainless Steel Wall-Mount Enclosure; 60"H x 36"W x 10"D (Code 421 & 422)

Code	Branch Circuit Breaker Selection (DO NOT EXCEED MAIN RATING)
1(*)	1-Pole Breaker, 277 Vac, 15 Amps, 30 mA Ground Fault Equipment Protection
2(*)	1-Pole Breaker, 277 Vac, 20 Amps, 30 mA Ground Fault Equipment Protection
3(*)	1-Pole Breaker, 277 Vac, 30 Amps, 30 mA Ground Fault Equipment Protection

Code	Main Disconnect Switch Selection
0	None
1	100 Amp with 25k Fault Protection (Code 181, 301 & 421 Only)
2	250 Amp with 35k Fault Protection (Code 302 & 422 Only)

Code	Cabinet Heater
0	None
1	Thermostat Controlled Enclosure Heater

Code	Pressurization Control System
0	None
1	Type Z Class 1, Division 2

FPLS	**181**	**2**	**1**	**1(*)**	**1**	**1**	**0**	**Typical Model Number**

Technical Notes:
NEMA 4 Enclosure Dimensions:
Codes: 181, 301 & 302 – 48"H x 36"W x 10"D Single Door, Wall Mount Enclosure
Codes: 421 & 422– 60"H x 36"W x 10"D Single Door, Wall Mount Enclosure
(*) Enter number of circuit breakers in parenthesis

weatherTRACE™

Freeze Protection Heat Trace Panels *(cont'd.)*

Ordering Information

To Order — *Complete the Model Number using the Matrix provided.*

Model **277 Vac 4-Wire**

FPAS FPAS Series Ambient Sensing Heat Trace Panels are designed for use in industrial Freeze Protection and Snow Melt applications. The Chromalox FPAS series offers the following standard features: NEMA 4 enclosure, Hand/Off/Auto Selector Switch, Load Energized Indicator Lamp, Main Power On Lamp, Main Contactor, and Thermal Magnetic Branch Circuit Breakers with 30 mA Ground Fault Equipment Protection. Options include: NEMA 4X 304 Stainless Steel Enclosures, Main Disconnect Switch, Remote or Local Ambient Temperature Controller, Enclosure Heater, and Type Z Pressurization System. The FPAS series panels have UL and cUL Third Party Approvals.

Code	Panelboard	Available Breaker Poles
181	18 Positions (100 Amp Main Rating)	(8) 1-pole breakers
301	30 Positions (100 Amp Main Rating)	(14) 1-pole breakers
421	42 Positions (100 Amp Main Rating)	(20) 1-pole breakers
302	30 Positions (225 Amp Main Rating)	(14) 1-pole breakers
422	42 Positions (225 Amp Main Rating)	(20) 1-pole breakers

Code	Power Source
1	3 Phase Power, 277/480 Vac 4-Wire

Code	Enclosure
1	NEMA 4 Single-Door, Wall-Mount Steel Enclosure
2	NEMA 4X 304 Stainless Steel Wall-Mount Enclosure; 48"H x 36"W x 10"D (Code 181, 301 & 302)
3	NEMA 4X 304 Stainless Steel Wall-Mount Enclosure; 60"H x 36"W x 10"D (Code 421 & 422)

Code	Branch Circuit Breaker Selection (DO NOT EXCEED MAIN RATING)
1(*)	1-Pole Breaker, 277 Vac, 15 Amps, 30 mA Ground Fault Equipment Protection
2(*)	1-Pole Breaker, 277 Vac, 20 Amps, 30 mA Ground Fault Equipment Protection
3(*)	1-Pole Breaker, 277 Vac, 30 Amps, 30 mA Ground Fault Equipment Protection
4(*)	1-Pole Breaker, 277 Vac, 40 Amps, 30 mA Ground Fault Equipment Protection

Code	Main Disconnect Switch Selection
0	None
1	100 Amp with 25k Fault Protection (Code 181, 301 & 421 Only)
2	250 Amp with 35k Fault Protection (Code 302 & 422 Only)

Code	Ambient Controller
0	None (Customer Supplied)
1	RTAS Ambient Sensing Thermostat (Remote Mounted)
2	RTAS-EP Ambient Sensing Thermostat (Remote Mounted Division 2 Hazardous Area)
3	B-100 NEMA 4X Ambient Sensing Thermostat (Remote Mounted)
4	E-100-EP Ambient Sensing Thermostat (Remote Mounted Division 1 Hazardous Area)
5	1601E-11030 1/16 DIN Temperature Controller (Panel Door Mounted)
6	LCD-1 Snow Switch (Remote Mounted)

Code	Cabinet Heater
0	None
1	Thermostat Controlled Enclosure Heater

Code	Pressurization Control System
0	None
1	Type Z Class 1, Division 2

FPAS	**422**	**2**	**1**	**1(*)**	**1**	**1**	**0**	**0**	**Typical Model Number**

Technical Notes:
NEMA 4 Enclosure Dimensions:
Codes: 181, 301 & 302 – 48"H x 36"W x 10"D Single Door, Wall Mount Enclosure
Codes: 421 & 422– 60"H x 36"W x 10"D Single Door, Wall Mount Enclosure
(*) Enter number of circuit breakers in parenthesis

weatherTRACE™

Freeze Protection Heat Trace Panels *(cont'd.)*

Ordering Information

To Order — *Complete the Model Number using the Matrix provided.*

Model	277 Vac 4-Wire Ambient Rating 40°C (104°F)
FPASM	FPASM Series Ambient Sensing Heat Trace Panels are designed for use in industrial Freeze Protection and Snow Melt applications. The Chromalox FPASM series offers the following standard features: NEMA 4 enclosure, Hand/Off/Auto Selector Switch, Load Energized Indicator Lamp, Main Power On Lamp, Main Contactor, and Thermal Magnetic Branch Circuit Breakers with 30 mA Ground Fault Equipment Protection. Options include: NEMA 4X 304 Stainless Steel Enclosures, Main Disconnect Switch, Remote or Local Ambient Temperature Controller, Enclosure Heater, and Type Z Pressurization System. The FPASM series panels have UL and cUL Third Party Approvals.

Code	Panelboard	Available Breaker Poles
181	18 Positions (100 Amp Main Rating)	1(8) 1-pole Breakers
301	30 Positions (100 Amp Main Rating)	(14) 1-pole Breakers
421	42 Positions (100 Amp Main Rating)	(20) 1-pole Breakers
302	30 Positions (225 Amp Main Rating)	(14) 1-pole Breakers
422	42 Positions (225 Amp Main Rating)	(20) 1-pole Breakers

Code	Power Source
1	3 Phase Power, 277/480 Vac 4-Wire

Code	Enclosure
1	NEMA 4 Single-Door Wall-Mount Steel Enclosure
2	NEMA 4X 304 Stainless Steel Wall-Mount Enclosure 48"H x 36"W x 10"D (Code 181, 301 & 302)
3	NEMA 4X 304 Stainless Steel Wall-Mount Enclosure 60"H x 36"W x 10"D (Code 421 & 422)

Code	Branch Circuit Breaker Selection (DO NOT EXCEED MAIN RATING)
1(*)	1-Pole Breaker, 277 Vac, 15 Amps, 30mA Ground Fault Equipment Protection.
2(*)	1-Pole Breaker, 277 Vac, 20 Amps, 30mA Ground Fault Equipment Protection.
3(*)	1-Pole Breaker, 277 Vac, 30 Amps, 30mA Ground Fault Equipment Protection.
4(*)	1-Pole Breaker, 277 Vac, 40 Amps, 30mA Ground Fault Equipment Protection.

Code	Main Disconnect Switch Selection
0	None
1	100 Amp with 25k Fault Protection (Code 181, 301, & 421 Only)
2	250 Amp with 35K Fault Protection

Code	Ambient Controller
0	None (Customer Supplied)
1	RTAS Thermostat (Remote Mounted)
2	RTAS-EP Division 2 Thermostat (Remote Mounted)
3	B-100 NEMA 4X Thermostat (Remote Mounted)
4	E-100 NEMA Division 1 Thermostat (Remote Mounted)
5	1601E-11030 1/16 DIN Controller (Panel Door Mounted)
6	LCD-1 Snow Switch (Remote Mounted)

Code	Enclosure Heater
0	None
1	Thermostat Controlled Enclosure Heater

Code	Pressurization Control System
0	None
1	Type Z Class 1 Division 2

FPASM	422	1	1	1(10)	2	1	0	0	Typical Model Number

Technical Notes:
NEMA 4 Enclosure Dimensions:
Codes: 181, 301 & 302 – 48"H x 36"W x 10"D Single Door, Wall Mount Enclosure
Codes: 421 & 422– 60"H x 36"W x 10"D Single Door, Wall Mount Enclosure
(*) Enter number of circuit breakers in parenthesis

weatherTRACE™

Freeze Protection Heat Trace Panels *(cont'd.)*

Ordering Information

To Order — *Complete the Model Number using the Matrix provided.*

Model	277 Vac 4-Wire Ambient Rating 40°C (104°F)
FPLSM	FPLSM series Line Sensing Heat Trace Panels are designed for use in Freeze Protection and Snow Melt applications. The Chromalox FPLSM series offers the following standard features: NEMA 4 enclosure, Main Power On Lamp, and Thermal Magnetic Branch Circuit Breakers with 30 mA Ground Fault Equipment Protection. The FPLSM Options include: NEMA 4X 304 Stainless Steel Enclosures, Main Disconnect Switch, Enclosure Heater, and Type Z Pressurization System. The FPLSM series have UL and cUL Third Party Approvals.

Code	Panelboard	Available Breaker Poles
181	18 Positions (100 Amp Main Rating)	1(8) 1-pole Breakers
301	30 Positions (100 Amp Main Rating)	(14) 1-pole Breakers
421	42 Positions (100 Amp Main Rating)	(20) 1-pole Breakers
302	30 Positions (225 Amp Main Rating)	(14) 1-pole Breakers
422	42 Positions (225 Amp Main Rating)	(20) 1-pole Breakers

Code	Power Source
1	3 Phase Power, 277/480 Vac 4-Wire

Code	Enclosure
1	NEMA 4 Single-Door Wall-Mount Steel Enclosure
2	NEMA 4X 304 Stainless Steel Wall-Mount Enclosure 48"H x 36"W x 10"D (Code 181, 301 & 302)
3	NEMA 4X 304 Stainless Steel Wall-Mount Enclosure 60"H x 36"W x 10"D (Code 421 & 422)

Code	Branch Circuit Breaker Selection (DO NOT EXCEED MAIN RATING)
1(*)	1-Pole Breaker, 277 Vac, 15 Amps, 30mA Ground Fault Equipment Protection.
2(*)	1-Pole Breaker, 277 Vac, 20 Amps, 30mA Ground Fault Equipment Protection.
3(*)	1-Pole Breaker, 277 Vac, 30 Amps, 30mA Ground Fault Equipment Protection.

Code	Main Disconnect Switch Selection
0	None
1	100 Amp with 25k Fault Protection (Code 181, 301, & 421 Only)
2	250 Amp with 35K Fault Protection

Code	Enclosure Heater
0	None
1	Thermostat Controlled Enclosure Heater

Code	Pressurization Control System
0	None
1	Type Z for Class 1 Division 2

FPLS	**181**	**1**	**1**	**1(5)**	**1**	**0**	**0**	**Typical Model Number**

Technical Notes:
NEMA 4 Enclosure Dimensions:
Codes: 181, 301 & 302 – 48"H x 36"W x 10"D Single Door, Wall Mount Enclosure
Codes: 421 & 422– 60"H x 36"W x 10"D Single Door, Wall Mount Enclosure
(*) Enter number of circuit breakers in parenthesis

PHD & PHDT

Heavy Duty Fiberglas® Woven Drum Heaters

- **Stock Products**
- **5, 15, 30 and 55 Gallon Metal Drums**
- **4" Width**
- **Adjustable Thermostat, 50 - 425°F Optional**
- **120 or 240 Volt, Single Phase**
- **300 - 1,200 Watts**
- **Moisture Resistant**
- **Grounded heating element for Safe Operation**

Description

Type PHD Heavy-Duty Fiberglas® Woven Drum Heaters are constructed of Fiberglas® insulated resistance wire woven into a mesh blanket and then encased in layers of silicone rubber. Because of their construction, the Woven Drum Heaters are much stronger and more durable than the standard silicone.

Rubber Drum Heaters and recommended for harsh working environments. All versions use a spring clasp to provide a snug fit around the drums.

Features

- Low watt density electrical resistance heat.
- All 120V units come with a 6 foot power cord and three prong plug. (No plug is included with 240V heaters.)
- An optional built-in adjustable thermostat, 50 - 425°F, is available as a stock option.
- All models come with springs for attachment to your drum.
- Complete, ready to install and use as received.
- All models feature a grounded heating element for electrical protection.
- Girth extension straps are available from stock to use the heaters on non-standard size drums. They can be used to adapt stock heaters to larger drums or other cylindrical containers similar in size. They will permit extending the length of the heater to fit sizes 1/2 - 10" larger in circumference. One step is required per woven drum heater.

Girth Extension Straps

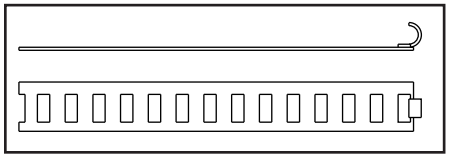

Applications

- Freeze Protection
- Melting of Low Melting Point Solids such as Paraffin, Resins and Chocolate
- Viscosity Control of Fluids such as Paint, Syrups and Honey
- Maintenance of Materials for Roofing, Chimney and Vent Pipe Work

Installation

The Woven Drum Heaters raise/maintain the temperature of the contents of the drum by convection. Heating will occur from the point where the heater is installed to the top of the drum. If the entire drum is to be heated, the drum heater should be installed as near to the bottom of the drum as possible. If only part of the material is to be heated, the drum heater should be installed around the center or top section of the drum. This will provide a faster heat-up and save energy. However, care must be given to ensure that the material level in the drum never falls below the location of the heater.

Specifications and Ordering Information

Drum				PHD			PHDT (50 - 425°F Adj. T'Stat)		
Size	Type	Volts	Watts	Model	PCN	Stock	Model	PCN	Stock
55 gallon	Metal	120	1200	**PHD-55-1-12**	**123027**	**S**	**PHDT-55-1-12**	**123107**	**S**
55 gallon	Metal	240	1200	**PHD-55-2-12**	**123035**	**S**	**PHDT-55-2-12**	**123115**	**S**
30 gallon	Metal	120	1000	**PHD-30-1-10**	**122980**	**S**	**PHDT-30-1-10**	**123060**	**S**
30 gallon	Metal	240	1000	**PHD-30-2-10**	**122999**	**S**	**PHDT-30-2-10**	**123078**	**S**
15 gallon	Metal	120	700	**PHD-15-1-7**	**122964**	**S**	**PHDT-15-1-7**	**123043**	**S**
15 gallon	Metal	240	700	**PHD-15-2-7**	**122972**	**S**	**PHDT-15-2-7**	**123051**	**S**
5 gallon	Metal	120	550	**PHD-5-1-5**	**123000**	**S**	**PHDT-5-1-5**	**123086**	**S**
5 gallon	Metal	240	550	**PHD-5-2-5**	**123019**	**S**	**PHDT-5-2-5**	**123094**	**S**
—	—	—	—	**PDES-10 Girth Extension Strap**	**290132**	**S**	**PDES-10 Girth Extension Strap**	**290132**	**S**

To Order— Specify model, PCN and quantity.

IBG
Flexible Thermal Drum Insulation Blanket

- **Flexible and Easy to Mount**
- **Chemical and Moisture Resistant**
- **450°F Max. Exposure Temp.**
- **Designed for Integrated Use with Flexible Drum Heaters**

Description

Insulating blankets are energy saving blankets that increase heating efficiency and reduce operating costs. Bulk Fiberglas® insulation is covered with silicone glass cloth. Easy installation is provided with Velcro® fastening device. All blankets are moisture resistant, but not waterproof.

Type IBG are stock insulation blankets designed to use in conjunction with Chromalox stock drum heaters. They are designed to only cover the drum heater; providing thermal protection from the back, heated-surface of the drum heater. Full coverage thermal insulation blankets are available as made-to-order items per customer specifications. All stock products are shipped within 24 hours.

Applications

- Thermal Protection from Heated Surfaces
- Thermal Insulation to Minimize Heat Loss
- Maximize Effectiveness of Heater

Ordering Information

Please refer to the matrix provided on the Flexible Heater Ordering Guidelines page which follows.

Specifications and Ordering Information

Model	Stock	PCN	Wt. (Lbs.)	Stock
IBG-5	**S**	**298070**	2	NS
IBG-16	**S**	**299225**	2	NS
IBG-30	**S**	**299233**	3	**S**
IBG-55	**S**	**298089**	3	**S**

Stock Status: **S** = stock AS = assembly stock NS = non-stock
To Order—Specify model, PCN and quantity.

SL-B

Silicone Rubber Insulated Enclosure & Air Heater

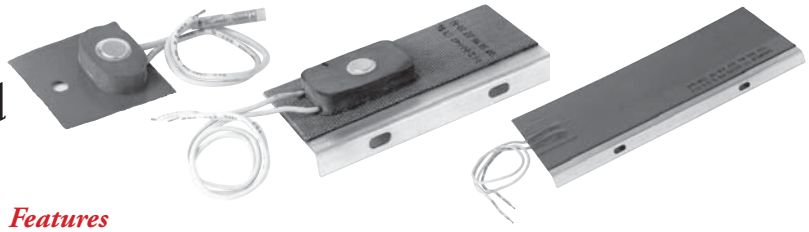

- **All Models Stocked**
- **25, 50, 100 and 200 Watts**
- **120 Volts**
- **Vulcanized to Mounting Plate for Easy Installation**
- **Custom Design and Thermostats Available**
- **Air Temperature Sensing Thermostats (40˚F close, 55˚F open) available**

Description

Type SL-B Silicone Rubber Insulated Enclosure Heaters and General Purpose Air Heaters are used for freeze protection and condensate protection in electrical enclosures. They are also installed in equipment to keep mechanical components functioning in applications such as ATM machines and automatic doors. Shipment can be made within 24 hours from receipt of order.

Features

- 10" Lead Length is standard
- 25, 50, 100 and 200 watt heaters available with or without integral air temperature sensing thermostat.
- All stock heaters operate on 120V. Heaters requiring other voltages up to 600V are available as non-stock items however special thermostats with be required.
- Easy installation. Consult Chromalox with Bracket and Mounting Slots
- Integral or remote air temperature sensing thermostats ensure heater operation in condensation forming and other air heating application conditions.

Applications

Freeze or condensation protection in enclosures containing electronic equipment, such as: Temperature Control Panels, Control Valve Housings, ATMs, Traffic Signal Boxes. Also, General Purpose Air Heating applications.

Specifications

Watts	Dimensions (In.)		
	Heated Surface	Plate Size	Mounting Surface
25	2 x 5	2.5 x 5	0.5 x 5
50	2 x 5	2.5 x 5	0.5 x 5
100	2 x 10	2.5 x 10	0.5 x 10
200	4 x 10	4.5 x 10	0.5 x 10

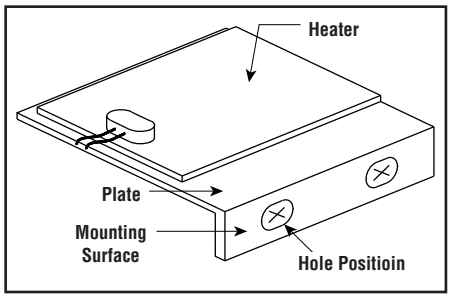

Installation

The SL-B enclosure heaters are factory vulcanized to an aluminum mounting plate that allows for easy installation. The mounting surface is perpendicular to the heater and has two tapped mounting Holes. If using the heater with the integral thermostat, vertical mounting with the sensor towards the base of the enclosure is recommended.

Model	Volts	Watts	PCN	Stock
Enclosure w/In-line Thermostat, (40°F)				
SL-B-2-5-55P	120	25	122622	S
SL-B-2-5-55P	120	50	122606	S
SL-B-2-10-55P	120	100	122585	S
SL-B-4-10-55P	120	200	123297	S
Enclosure without Thermostat				
SL-B-2-5-O	120	25	122614	S
SL-B-2-5-O	120	50	122593	S
SL-B-2-10-O	120	100	122577	S
SL-B-4-10-O	120	200	123300	S
Field Installable Thermostat Kit, (40°F)				
T-N-55P-Kit	—	—	122657	S

Determining Minimum Recommended Wattage

°F Above Ambient	Total Surface Area (Ft²)													
	2	3	4	5	6	7.5	9	10	15	20	25	30	40	50
Uninsulated Enclosures														
20	30	40	55	70	80	100	120	135	205	270	335	405	540	670
40	55	80	110	135	160	200	245	270	405	540	670	805	1,075	1,340
60	90	120	160	205	245	300	365	405	605	805	1,005	1,210	1,610	2,010
80	110	160	215	270	325	400	485	540	805	1,075	1,340	1,610	2,145	2,680
100	135	200	270	335	405	500	605	670	1,005	1,340	1,675	2,010	2,680	3,350
120	165	240	320	405	485	600	725	805	1,210	1,610	2,010	2,415	3,220	4,020
140	190	280	375	470	565	700	845	940	1,410	1,880	2,345	2,815	3,775	4,690
Insulated Enclosures														
20	10	10	15	20	20	25	30	35	50	65	80	100	130	160
40	15	20	30	35	40	50	60	65	100	130	160	195	260	320
60	20	30	55	50	60	75	90	100	145	195	240	290	385	480
80	30	40	55	65	80	100	115	130	195	260	320	320	515	640
100	35	50	65	80	100	125	145	160	240	320	400	400	640	800
120	40	60	80	100	115	150	175	195	290	385	480	480	770	960
140	45	70	90	115	135	175	205	225	340	450	560	560	900	1,120

Notes –
A. °F = (°C x1.8) + 32 B. $Ft^2 = 0.092 \times m^2$

SLDH
Silicone Rubber Insulated Drum Heater

- **Stock Products**
- **For 5, 15, 30 and 55 Gallon Metal and Non-Metal Drums**
- **Adjustable Thermostats**
- **Chemical and Moisture Resistant**
- **Rugged and Flexible**
- **Easy to Store**
- **Internally Grounded Standard**

Description

Silicone Rubber Insulated Drum Heaters are constructed of silicone rubber reinforced Fiberglas® cloth laminated around resistance wire to provide flexible, moisture and chemical resistant heat. Drum heaters can withstand flexing without fear of premature failure. Stock drum heaters are shipped within 24 hours of receipt of your order.

Features

- Low watt density electrical resistance heat.
- All stock 120V products come with a 6 foot power cord and three-prong plug. 240V heaters do not include a plug.
- Optional built-in adjustable thermostat, 70 - 425˚F for steel drums or 70 - 140˚F for plastic drums.
- All models come with a heavy-duty spring assembly for attachment to your drum.
- Complete, ready to install and use as received.
- All grounded models feature a wire-mesh screen for ground-fault protection. Should the heater surface be punctured or damaged in any way, the grounding grid will provide electrical protection.
- Girth extension straps are available from stock so you can use Chromalox heavy duty SLDH on non-standard size drums. They can also be used to adapt stock heaters to larger drums or other cylindrical containers similar in size. They will permit extending the length of the heater to fit sizes 1/2 - 10" larger in circumference. One strap is required per heater.

Applications

- Freeze Protection
- Melting of Low Melting Point Solids such as Paraffin, Resins and Chocolate
- Viscosity Control of Fluids such as Paint, Syrups and Honey
- Maintenance of Materials for Roofing, Chimney and Vent Pipe Work

Installation

The SLDH heats the contents of the drum by convection. Heating will occur from the point where the heater is installed to the top of the drum. If the entire drum is to be heated, the SLDH should be installed as near to the bottom of the drum as possible. If only part of the material is to be heated, the drum heater should be installed around the center or top section of the drum. This will provide a faster heat-up and save energy. However, care must be given to ensure that the material level in the drum never falls below the location of the heater.

Girth Extension Straps

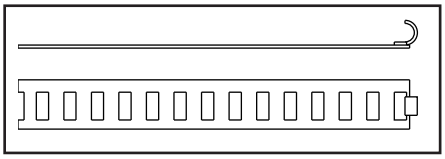

Note:

Not for heating flammable materials or for use in hazardous areas.

SLDH
Silicone Rubber Insulated Drum Heater *(cont'd.)*

1000 watt, 55 Gallon Drum Heater Performance
(Covered Drum Filled with Water at 70˚F ambient)

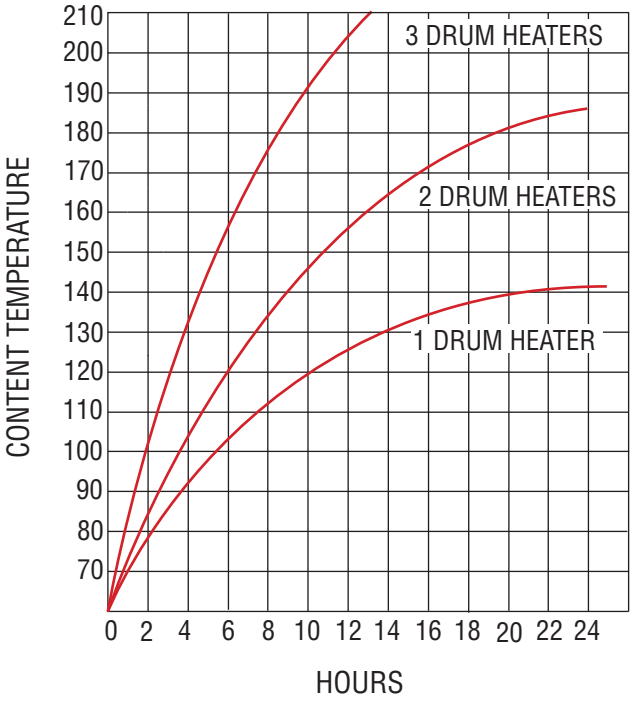

When a single heater is used, place the heater at the bottom of the drum to minimize stratification.

Drum Capacity Cross Reference

	Diameter (Inches)	Diameter (Millimeters)	
55 gal.	22-1/2 (nom.)	570	210 litres
30 gal.	18-1/2 (nom.)	470	115 litres
15 gal.	13-1/2 (nom.)	343	57 litres
5 gal.	11-1/2 (nom.)	290	20 litres

Specifications and Ordering Information

Drum Size	Drum Type	Adjustable Thermostat	Watts	Model Number 120 Volts	PCN	Model Number 240 Volts	PCN	Heater Width (In.)	Stock Status	Weight (Lbs.)
5 Gallon	**Metal**	70 to 425˚F	550	SLDH-05-A-6CPGM-1-55	123123	-	-	4	**S**	1.4
15 Gallon	**Metal**	70 to 425˚F	500	SLDH-15-A-6CPGM-1-50	123131	SLDH-15-A-6CGM-2-50	123211	3	**S**	1.412
15 Gallon	**Metal**	70 to 425˚F	700	SLDH-15-A-6CPGM-1-70	123140	-		4	**S**	1.6
30 Gallon	**Metal**	70 to 425˚F	750	SLDH-30-A-6CPGM-1-75	123158	SLDH-30-A-6CGM-2-75	123220	3	**S**	1.7
30 Gallon	**Metal**	70 to 425˚F	1000	SLDH-30-A-6CPGM-1-100	123166	-	-	4	**S**	2
55 Gallon	**Metal**	70 to 425˚F	1000	SLDH-55-A-6CPGM-1-100	123174	SLDH-55-A-6CGM-2-100	123238	3	**S**	1.9
55 Gallon	**Metal**	70 to 425˚F	1200	SLDH-55-A-6CPGM-1-120	123182	SLDH-55-A-6CGM-2-120	123246	4	**S**	2.3
5 Gallon	**Plastic**	70 to 140˚F	300	SLDHP-05-A-6CPGM-1-30	123190	-	-	9.5	**S**	3.4
55 Gallon	**Plastic**	70 to 140˚F	750	SLDHP-55-A-6CPGM-1-75	123203	-	-	9.5	**S**	5.1

Stock Status: **S** = stock AS = assembly stock NS = non-stock
To Order— Specify model, PCN and quantity.

Technical Information

Heat Transfer Fundamentals & Thermodynamic Properties

Heat Transfer Fundamentals

The principles of heat transfer are well understood and are briefly described below. Heat energy is transferred by three basic modes. All heating applications involve each mode to a greater or lesser degree.

- Conduction
- Convection
- Radiation

Conduction is the transfer of heat energy through a solid material. Metals such as copper and aluminum are good conductors of heat energy. Glass, ceramics and plastics are relatively poor conductors of heat energy and are frequently used as thermal insulators. All gases are poor conductors of heat energy. A combination of expanded glass or ceramic fiber filled with air is excellent thermal insulation. Typical conduction heating applications include platen heating (cartridge heaters), tank heating (strip and ring heaters), pipe tracing and other applications where the heater is in direct contact with the material being heated.

Convection is the transfer of heat energy by circulation and diffusion of the heated media. It is the most common method of heating fluids or gases and also the most frequent application of electric tubular elements and assemblies. Fluid or gas in direct contact with a heat source is heated by conduction causing it to expand. The expanded material is less dense or lighter than its surroundings and tends to rise. As it rises, gravity replaces it with colder, denser material which is then heated, repeating the cycle. This circulation pattern distributes the heat energy throughout the media. Forced convection uses the same principle except that pumps or fans move the liquid or gas instead of gravity.

Convection in a Liquid

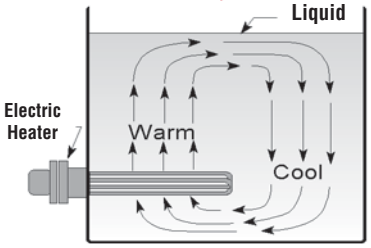

Typical convection heating applications include water and oil immersion heating, air heating, gas heating and comfort air heating.

Radiation is the transfer of heat energy by electromagnetic (infrared) waves and is very different from conduction and convection. Conduction and convection take place when the material being heated is in direct contact with the heat source. In infrared heating, there is no direct contact with the heat source. Infrared energy travels in straight lines through space or vacuum (similar to light) and does not produce heat energy until absorbed. The converted heat energy is then transferred in the material by conduction or convection.

Radiant Energy (Infrared) Heating

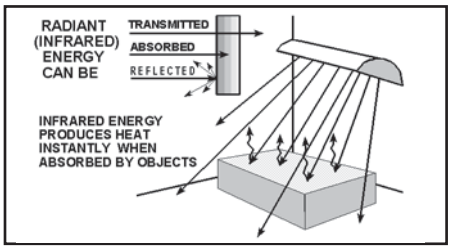

All objects above "absolute zero" temperature radiate infrared energy with warmer objects radiating more energy than cooler objects. Infrared energy radiating from a hot object (heating element) strikes the surface of a cooler object (work piece), is absorbed and converted to heat energy. Paint drying by radiant heaters is a typical application of infrared heating. The most important principle in infrared heating is that infrared energy radiates from the source in straight lines and **does not become heat energy until absorbed by the work product.**

Thermodynamic Properties

All materials have basic physical constants and thermodynamic properties. These constants are used in the evaluation of the materials and in heat energy calculations. The constants and properties most often used are:

- Specific Heat (C_p)
- Heat of Fusion (H_{fus})
- Heat of Vaporization (H_{vap})
- Thermal Conductivity (k)
- Thermal Resistivity (R)

Specific Heat (Quantity of Heat Energy) — All materials contain or absorb heat energy in differing amounts. The quantity of heat energy or thermal capacity of a particular material is called its **specific heat**.

The specific heat of a substance is defined as the amount of heat energy required to raise one pound of the material by one degree Fahrenheit. Specific heat factors are usually defined as British thermal units per pound per degree Fahrenheit **(Btu/lb/°F)**. The specific heat of most materials is constant at only one temperature and usually varies to some degree with temperature. Water has a specific heat of 1.0 and absorbs large quantities of heat energy. Air, with a specific heat of 0.24, absorbs considerably less heat energy per pound.

Heat of Fusion or Vaporization — Many materials can change from a solid to a liquid to a gas. For the change of state to occur, heat energy must be added or released. Water is a prime example in that it changes from a solid (ice) to a liquid (water) to a gas (steam or vapor). If the change is from a solid to a liquid to a gas, heat energy is added. If the change is from a gas to a liquid to a solid, heat energy is released. These energy requirements are called the **heat of fusion** and the **heat of vaporization**. They are expressed as Btu per pound **(Btu/lb)**.

- **Heat of Fusion** is the amount of energy required to transform a material from a solid to a liquid (or the reverse) at the same temperature. Water has a heat of fusion of 143 Btu/lb.
- **Heat of Vaporization** is the amount of energy required to transform a material from a liquid to a gas (or the reverse) at the same temperature. Water has a high heat of vaporization, 965 Btu/lb. Water can transfer large amounts of heat energy in the form of condensing steam.

Thermal Conductivity is the ability of a material to transmit heat energy by conduction. Thermal conductivity is identified as *"k"* and is usually expressed in British thermal units per linear inch (or foot) per hour per square foot of area per degree Fahrenheit. **(Btu/in/hr/ft²/°F) or (Btu/ft/hr/ft²/°F)**. *"k"* factors are used extensively in comfort heating applications to rate the effectiveness of building construction and other materials as thermal insulation. *"k"* factors are also used in the calculation of heat losses through pipe and tank insulation.

Thermal Resistivity or "R" is the inverse of thermal conductivity. Insulating materials are rated by "R" factors. The higher the "R" factor, the more effective the insulation.

Technical Information

Determining Heat Energy Requirements

General Applications

The objective of any heating application is to raise or maintain the temperature of a solid, liquid or gas to or at a level suitable for a particular process or application. Most heating applications can be divided into two basic situations; applications which require the maintenance of a constant temperature and applications or processes which require work product to be heated to various temperatures. The principles and calculation procedures are similar for either situation.

Constant Temperature Applications

Most constant temperature applications are special cases where the temperature of a solid, liquid or gas is maintained at a constant value regardless of ambient temperature. Design factors and calculations are based on steady state conditions at a fixed difference in temperature. Heat loss and energy requirements are estimated using "worst case" conditions. For this reason, determining heat energy requirements for a constant temperature application is relatively simple. Comfort heating (constant air temperature) and freeze protection for piping are typical examples of constant temperature applications. The equations and procedures for calculating heat requirements for several applications are discussed later in this section.

Variable Temperature Applications

Variable temperature (process) applications usually involve a start-up sequence and have numerous operating variables. The total heat energy requirements for process applications are determined as the sum of these calculated variables. As a result, the heat energy calculations are usually more complex than for constant temperature applications. The variables are:

Total Heat Energy Absorbed — The sum of all the heat energy absorbed during start-up or operation including the work product, the latent heat of fusion (or vaporization), make up materials, containers and equipment.

Total Heat Energy Lost — The sum of the heat energy lost by conduction, convection, radiation, ventilation and evaporation during start-up or operation.

Design Safety Factor — A factor to compensate for unknowns in the process or application.

Process Applications

The selection and sizing of the installed equipment in a process application is based on the **larger of two calculated heat energy requirements**. In most process applications, the start-up and operating parameters represent two distinctly different conditions in the same process. The heat energy required for start-up is usually considerably different than the energy required for operating conditions. In order to accurately assess the heat requirements for an application, each condition must be evaluated. The comparative values are defined as follows:

- **Calculated heat energy required for process start-up over a specific time period.**
- **Calculated heat energy required to maintain process temperatures and operating conditions over a specific cycle time.**

Determining Heat Energy Absorbed

The first step in determining total heat energy requirements is to determine the heat energy absorbed. If a change of state occurs as a direct or indirect part of the process, the heat energy required for the change of state must be included in the calculations. This rule applies whether the change occurs during start-up or later when the material is at operating temperature. Factors to be considered in the heat absorption calculations are shown below:

Start-Up Requirements (Initial Heat-Up)

- Heat absorbed during start-up by:
  - Work product and materials
  - Equipment (tanks, racks, etc.)
- Latent heat absorption at or during start-up:
  - Heat of fusion
  - Heat of vaporization
- Time factor

Operating Requirements (Process)

- Heat absorbed during operation by:
  - Work product in process
  - Equipment loading (belts, racks, etc.)
  - Make up materials
- Latent heat absorption during operation:
  - Heat of fusion
  - Heat of vaporization
- Time (or cycle) factor, if applicable

Determining Heat Energy Lost

Objects or materials at temperatures above the surrounding ambient lose heat energy by conduction, convection and radiation. Liquid surfaces exposed to the atmosphere lose heat energy through evaporation. The calculation of total heat energy requirements must take these losses into consideration and provide sufficient energy to offset them. Heat losses are estimated for both start-up and operating conditions and are added into the appropriate calculation.

Heat Losses at Start-Up — Initially, heat losses at start-up are zero since the materials and equipment are all at ambient temperature. Heat losses increase to a maximum at operating temperature. Consequently, start-up heat losses are usually based on an average of the loss at start-up and the loss at operating temperature.

Heat Losses at Operating Temperature — Heat losses are at a maximum at operating temperature. Heat losses at operating temperature are taken at full value and added to the total energy requirements.

Estimating Heat Loss Factors

The heat losses just discussed can be estimated by using factors from the charts and graphs provided in this section. Total losses include radiation, convection and conduction from various surfaces and are expressed in watts per hour per unit of surface area per degree of temperature **(W/hr/ft²/°F)**.

Note — Since the values in the charts are already expressed in watts per hour, they are not influenced by the time factor *"t"* in the heat energy equations.

Design Safety Factors

In many heating applications, the actual operating conditions, heat losses and other factors affecting the process can only be estimated. A safety factor is recommended in most calculations to compensate for unknowns such as ventilation air, thermal insulation, make up materials and voltage fluctuations. As an example, a voltage fluctuation (or drop) of 5% creates a 10% change in the wattage output of a heater.

Safety factors vary from 10 to 25% depending on the level of confidence of the designer in the estimate of the unknowns. The safety factor is applied to the sum of the calculated values for heat energy absorbed and heat energy lost.

Technical Information

Determining Heat Energy Requirements *(cont'd.)*

Comfort Heating

For complete building and space heating applications, it is recommended that a detailed analysis of the building construction heat losses (walls, ceilings, floors, windows, etc.) be performed using ASHRAE guidelines. This is the most accurate and cost effective estimating procedure. However, a quick estimate of the kW requirements for room and supplemental heating or freeze protection can be obtained using the chart to the right.

Problem — A warehouse extension measures 20 ft long x 13 ft wide x 9 ft high. The building is not insulated. Construction is bare concrete block walls and an open ceiling with a plywood deck and built-up roof. Determine the kW required to maintain the warehouse at 70°F when the outside temperature is 0°F.

Solution —

1. **Calculate** the volume of the room.

   20 ft x 13 ft x 9 ft = 2,340 ft^3

2. **Refer** to the chart, use Curve D which corresponds to the building construction.

3. **Find** the intersection of 2,340 ft^3 with curve D. The kilowatts required are 9.3 kW. Suggest using a 10 kW unit blower heater.

Note — If the volume of the room is larger than the chart values, divide by 2, 3, 4, etc. until the trial volume fits the curve. Then select heater from this volume. Multiply heaters selected by the number used to select the trial volume.

Comfort Heating Chart

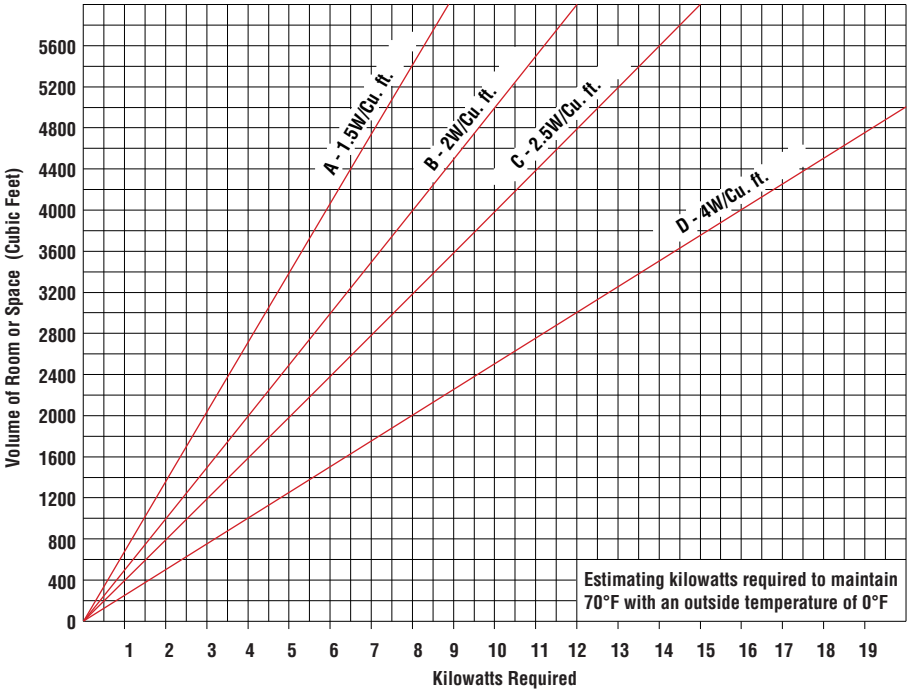

Curve A — Rooms with little or no outside exposure. No roof or floor with outside exposure; only 1 wall exposed with not over 15% door and window area.

Curve B — Rooms with average exposure. Roof and 2 or 3 walls exposed, up to 30% door and window area. But with roof, walls and floor insulated if exposed to outside temperatures.

Curve C — Rooms with roof, walls and floor uninsulated but with inside facing on walls and ceiling.

Curve D — Exposed guard houses, pump houses, cabins and poorly constructed rooms with reasonably tight joints but no insulation. Typical construction of corrugated metal or plywood siding, single layer roofs.

Technical Information

General Industrial Sizing Guide

CHROMALOX

General Industrial Sizing Guide

Heat Loss Calculation- Indoor

Job Name: _____ **Date:** _____

Location: _____ **Room:** _____

Bid Number: _____ **Reference:** _____

Voltage: _____ V **Phase:** _____

Room Size

Length: _____ ft. **Width:** _____ ft. **Ceiling Height:** _____ ft.

Total Square Footage: _____ square feet

Heater Mounting Height: _____ ft.

Design Information

Ceiling R-Factor: _____ **Outside Design Temperature:** _____ F

Wall R-Factor: _____ **Desired Inside Temperature:** _____ F

Temperature Rise: [ ] F

Air Changes Per Hour: _____ cubic foot per hour

Calculation

Item	Area	sq-ft	X	U-Factor	=	BTU/Hr/Degree F
Windows	_____	sq-ft	X	_____	=	_____
Doors	_____	sq-ft	X	_____	=	_____
Net Wall	_____	sq-ft	X	_____	=	_____
Roof	_____	sq-ft	X	_____	=	_____
Floor Perimeter *	_____	ft	X	_____	=	_____

Item A **TOTAL** = [ ] BTU/Hr/degree F

* For floor perimeter use U-factor of 1.2, 0.7, or 0.6 for exposed, 1" insulation, or 2" insulation respectively

Air Change Loss Cubic foot per hour X 0.019 BTU/cubic ft. = BTU/hr/degree F

Item B _____ cubic ft./hr X 0.019 BTU/cubic ft. = [ ]

TOTAL Item A + Item B = [ ] BTU/Hr/degree F

Item C Convert to Watts = Total / 3.412 = [ ] Watts/Hr/degree F

TOTAL HEATING REQUIREMENT

Item C x Temperature Rise = Watts/Hr

[ ] Watts/Hr/degree F **X** [ ] degree F **=** [ ]

Total Watts/Hr.

Heat Loss Calculation Form for General Industrial Applications

Technical Information

Typical Outside Design Temperatures for the United States

State	City	Mean Wind Speed: MPH[3]	Heating Degree Days[1]	Yearly Snowfall Mean[4]	Outside Design Temp.[2]
Arkansas	Ft. Smith	7.6	3336	5.7	12.0
	Little Rock	8.1	3354	5.1	15.0
California	Bakersfield	6.4	2185	0.0	30.0
	Bishop	N/A	4313	8.6	10.0
	Fresno	6.3	2650	0.1	28.0
	Los Angeles	7.4	1819	0.0	37.0
	Sacramento	8.3	2843	0.1	30.0
	San Diego	6.7	1507	0.0	42.0
	San Francisco/Oakland	8.2	3080	0.1	35.0
Colorado	Colorado Springs	10.4	6473	39.3	-3.0
	Denver	9.1	6016	59.0	-5.0
	Grand Junction	8.1	5605	26.3	2.0
	Pueblo	8.7	5394	30.9	-7.0
Connecticut	Hartford	8.9	6350	53.0	3.0
	New Haven	N/A	6026	N/A	3.0
	Bridgeport	12.0	5461	26.8	6.0
Delaware	Wilmington	9.1	4940	19.9	10.0
D.C.	Washington DC	9.3	4211	16.3	14.0
Florida	Daytona Beach	9.0	902	0.0	32.0
	Jacksonville	8.5	1327	0.0	29.0
	Miami	9.1	206	0.0	44.0
	Orlando	8.7	733	0.0	44.0
	Pensacola	8.3	1578	0.3	25.0
	Tallahassee	6.9	1563	0.0	27.0
	Tampa	8.8	718	0.0	36.0
Georgia	Atlanta	9.1	3095	1.5	17.0
	Augusta	6.6	2547	0.9	20.0
	Columbus/Lawson	6.9	2378	0.4	21.0
	Macon	7.8	2240	1.0	21.0
	Rome	N/A	3342	2.0	17.0
	Savannah/Travis Fld.	8.1	1952	0.4	24.0
Idaho	Boise	9.0	5833	21.5	3.0
	Lewiston	N/A	5464	17.9	-1.0
	Pocatello	10.3	7063	40.0	-8.0
Illinois	Rockford	9.9	6845	34.1	-9.0
	Moline	9.9	6395	30.3	-9.0
	Peoria	10.3	6098	24.3	-8.0
	Springfield	11.4	5558	23.1	-3.0
	Chicago	10.3	6497	37.4	-8.0

Technical Information

Typical Outside Design Temperatures for the United States *(cont'd.)*

State	City	Mean Wind Speed: MPH[3]	Heating Degree Days[1]	Yearly Snowfall Mean[4]	Outside Design Temp.[2]
Indiana	Evansville	8.2	4629	13.4	4
	Fort Wayne	10.3	6209	31.5	-4
	Indianapolis	9.7	5577	21.6	-2
	South Bend	10.6	6462	68.5	-3
	Terre Haute	N/A	5366	N/A	-2
Iowa	Burlington	10.3	6149	25.7	-7
	Des Moines	11.1	6710	33.1	-10
	Dubuque	N/A	7277	42.6	-12
	Sioux City	10.9	6953	30.6	-11
	Waterloo	10.7	7415	31.2	-15
Kansas	Dodge City	14.1	5046	18.2	0
	Goodland	12.7	6119	33.6	-5
	Topeka	10.4	5243	20.8	0
	Wichita	12.5	4687	15.1	3
Kentucky	Lexington	9.7	4729	15.9	3
	Louisville	8.4	4645	17.6	5
Louisiana	Baton Rouge	7.9	1670	0.0	25
	Lake Charles	8.8	1498	0.0	27
	New Orleans	8.3	1465	0.0	29
	Shreveport	8.8	2167	0.0	20
Maine	Caribou	11.2	9632	112.9	-8
	Portland	8.8	7498	74.5	-6
Maryland	Baltimore	9.4	4729	21.2	10
Massachusetts	Boston	12.6	5621	42.1	6
	Worcester	10.4	6848	74.2	0
Michigan	Alpena	7.6	8518	84.9	-11
	Detroit/Metro.	10.4	6419	39.9	3
	Flint	10.4	7041	45.3	-4
	Grand Rapids	10.0	6801	76.6	1
	Lansing	10.3	6904	48.7	-3
	Marquette	8.3	8351	107.3	-12
	Muskegon	10.9	6890	95.9	2
	Sault Ste. Marie	9.6	9193	110.8	-12
Minnesota	Duluth	11.4	9756	77.8	-21
	International Falls	9.1	10547	60.1	-29
	Mpls./St. Paul	10.5	8159	46.1	-19
	Rochester	12.7	8227	44.4	-17
	St. Cloud	8	8868	43.1	-15
Mississippi	Jackson	7.6	2300	0.0	21
	Meridian	6	2388	0.0	19
Missouri	Columbia	9.9	5083	22.0	-1
	Kansas City	10.3	5357	20.0	2
	St. Joseph	10	5440	19.2	-3
	St. Louis	9.5	4750	18.5 2	
	Springfield	11.1	4570	15.5	3

Technical Information

Typical Outside Design Temperatures for the United States *(cont'd.)*

State	City	Mean Wind Speed: MPH[3]	Heating Degree Days[1]	Yearly Snowfall Mean[4]	Outside Design Temp.[2]
Nebraska	Grand Island	12.0	6425	29.0	-8
	Lincoln	10.6	6218	28.4	-5
	Norfolk	12.6	6981	28.8	-8
	North Platte	10.3	6747	29.9	-8
	Omaha	10.8	6049	32.0	-8
	Scottsbluff	10.7	6774	38.0	-8
Nevada	Elko	6.0	7483	38.9	-8
	Ely	10.5	7814	47.6	-10
	Las Vegas	9.0	2601	1.4	25
	Reno	6.4	6022	26.5	5
New Hampshire	Concord	6.7	7360	64.8	-8
New Jersey	Atlantic City	10.6	4940	15.8	10
	Newark	10.1	5034	27.3	10
	Trenton	9.0	4952	22.7	11
New Mexico	Albuquerque	9.0	4292	10.5	12
New York	Albany	8.9	6962	65.7	-6
	Binghamton	10.3	7285	86.9	-2
	Buffalo	12.3	6927	92.9	2
	New York/LaGuardia	12.2	4909	26.2	11
	Rochester	9.7	6719	86.9	1
	Syracuse	9.9	6678	110.7	-3
North Carolina	Asheville	7.8	4237	17.4	10
	Charlotte	7.6	3218	5.3	18
	Greensboro/Winston-Salem	7.7	3825	8.7	15
	Raleigh/Durham	7.9	3514	6.8	16
	Wilmington	9.0	2433	1.9	23
North Dakota	Bismarck	10.5	9044	38.7	-23
	Fargo	12.7	9271	35.5	-22
	Grand Forks	N/A	9871	N/A	-26
Ohio	Akron/Canton	9.9	6224	47.8	1
	Cincinnati	9.1	5070	23.9	1
	Cleveland	10.8	6154	52.2	1
	Columbus	8.7	5702	27.7	0
	Dayton	10.2	5641	27.8	-1
	Mansfield	11.1	5818	41.2	0
	Toledo	9.5	6381	38.9	-3
	Youngstown	10.1	6426	57.6	-1
Oklahoma	Oklahoma City	12.8	3695	8.8	9
	Tulsa	10.6	3680	9.1	8
Oregon	Baker	N/A	7087	N/A	-1
	Eugene	7.6	4739	7.6	17
	Medford	4.8	4930	8.7	19
	Pendleton	9.2	5240	17.7	-2
	Portland	7.8	4632	7.4	17

Technical Information

Typical Outside Design Temperatures for the United States *(cont'd.)*

State	City	Mean Wind Speed: MPH[3]	Heating Degree Days[1]	Yearly Snowfall Mean[4]	Outside Design Temp.[2]
Pennsylvania	Allentown	9.4	5827	31.5	4
	Erie	11.4	6851	83.3	4
	Harrisburg	7.7	5224	34.5	7
	Philadelphia	9.6	4865	20.2	10
	Pittsburgh	9.4	5930	45.3	1
	Williamsport	7.9	5982	43.8	2
Rhode Island	Providence	10.7	5972	38.0	5
South Carolina	Charleston	8.8	2146	0.0	24
	Columbia	6.9	2598	1.7	20
	Greenville	6.8	3163	5.7	18
South Dakota	Aberdeen	11.2	8616	36.4	-19
	Huron	11.9	8054	39.5	-18
	Pierre	N/A	7283	N/A	-15
	Rapid City	11.3	7324	39.3	-11
	Sioux Falls	11.2	7838	39.1	-15
Tennessee	Bristol	5.6	4306	15.6	9
	Chattanooga	6.3	3505	4.0	13
	Knoxville	7.3	3478	12.2	13
	Memphis	9.1	3227	5.5	13
	Nashville	8.0	3696	10.9	9
Texas	Abilene	12.2	2610	4.5	15
	Amarillo	13.7	4183	14.3	6
	Austin	9.3	1737	1.0	24
	Brownsville	11.8	650	0.0	35
	Dallas/Ft. Worth	10.9	2382	2.9	17
	El Paso	9.5	2678	4.7	20
	Galveston	11.0	1224	0.3	31
	Houston	7.6	1434	0.4	27
	San Antonio	9.4	1570	0.5	18
Utah	Milford	N/A	6412	43.8	5
	Salt Lake City	8.7	5983	58.3	3
Vermont	Burlington	8.8	7876	79.3	-12
Virginia	Lynchburg	7.9	4233	18.1	12
	Norfolk	10.6	3488	7.0	20
	Richmond	7.5	3939	13.9	14
	Roanoke	8.4	4307	24.1	12
Washington	Olympia	6.7	5530	19.2	16
	Seattle	9.2	5185	14.6	21
	Spokane	8.7	6835	53.3	-6
	Walla Walla	5.3	4835	20.0	0
	Yakima	7.2	6009	24.5	-2
West Virginia	Beckley	9.5	5613	55.8	-2
	Charleston	6.5	4590	29.6	7
	Huntingdon	6.4	4624	24.1	5

Technical Information

Typical Outside Design Temperatures for the United States *(cont'd.)*

State	City	Mean Wind Speed: MPH[3]	Heating Degree Days[1]	Yearly Snowfall Mean[4]	Outside Design Temp.[2]
Wisconsin	Green Bay	10.2	8098	44.6	-13
	LaCrosse	8.8	7417	42.9	-13
	Madison	9.9	7730	40.2	-11
	Milwaukee	11.8	7444	45.9	-8
Wyoming	Casper	13.1	7555	73.9	-11
	Cheyenne	13.3	7255	51.2	-9

[1]**Heating Degree Days –** A unit based upon temperature difference and time, used in estimating fuel consumption and specifying nominal heating load of a building in winter. For any one-day, when the mean temperature is less than 65˚F, there exist as many degree-days as there are Fahrenheit degrees difference in temperature between the mean temperature for the day and 65˚F. These heating degree-days (as listed in above chart) were compiled during the 1941-1970 period as published by the National Climate Center.

[2]**Outside Design Temperature –** This figure represents the temperature which will include 99% of all the winterhour Fahrenheit temperatures. A base of 2160 hours (total hours in Dec., Jan., and Feb.) was used. Therefore, using this figure, as a design temperature will, on an average, cover all but 22 hours of expected winter temperatures. **ASRAE 1976 SYSTEMS HANDBOOK.**

[3]**Mean Wind Speed: MPH –** This figure was arrived at through existing and comparable exposures. This information was obtained from the Local Climatological Data, 1977. (This figure is for reference only – not required in computation)

[4]**Yearly Snowfall: Mean –** This mean value is for the period beginning 1944 through 1977. This information was obtained from the Local Climatological Data, 1977.

Technical Information

Radiant Infrared Heating - Comfort Heating

Indoor Spot Heating

Infrared spot heating of work stations and personnel in large unheated structures or areas has proven to be economical and satisfactory. The following guidelines may be used for spot heating applications (areas with length or width less than 50 feet).

1. **Determine** the coldest anticipated inside ambient temperature the system must overcome. If freeze protection is provided by another heating system, this temperature will be 40°F.
2. **Determine** the equivalent ambient temperature desired (normally 70°F is the nominal average).
3. **Subtract** 1 from 2 to determine the theoretical increase in ambient temperature (ΔT) expected from the infrared system. If drafts are present in the occupied area (air movement over 44 feet per minute (0.5 mph) velocity), wind shielding or protection from drafts should be considered.
4. **Determine** the area to be heated in ft^2. This is termed the "design or work area" (A_D) (Fig. 1).
5. **Multiply** the design area by one watt per square foot times the theoretical temperature increase (ΔT) desired as determined in Step 3 (minimum of 12 watts per square foot). The design factor of one watt per square foot density assumes a fixture mounting height of 10 feet. Add 5% for each foot greater than 10 feet in mounting height. Avoid mounting fixtures below 8 feet.
6. **Determine** fixture mounting locations
   a) In areas where the width dimension is 25 feet or less, use at least two fixtures mounted opposite each other at the perimeter of the area and tilted at an angle. This provides a greater area of exposure to the infrared energy by personnel in the work area. Tilt the fixtures so that the upper limit of the fixture pattern is at approximately six feet above the center of the work station area (Figure 2).
   b) When locating fixtures, be sure to allow adequate height clearance for large moving equipment such as cranes and lift trucks.
   c) Avoid directing infrared onto outside walls.
7. **Estimate** (tentatively) the radiated pattern area. Add length of fixture to the fixture pattern width (W) to establish pattern length (L). Pattern Area = L x W (Fig. 3).

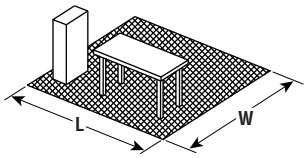

Figure 1 — Design Area

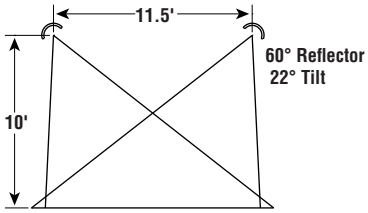

Figure 2 — Tilted Infrared Fixtures for Spot Heating

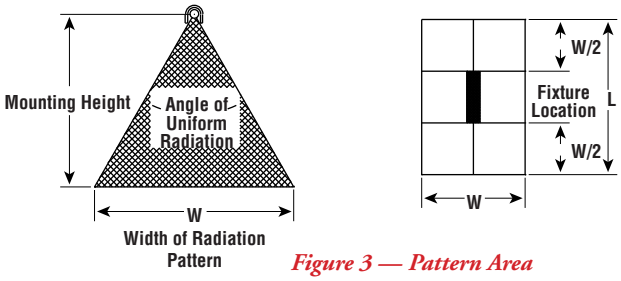

Figure 3 — Pattern Area

8. **Divide** the design area (Step 4) into the pattern area (Step 7).

   $$Q = \frac{\text{Pattern Area}}{\text{Design Area}}$$

   If the pattern area is equal to or greater than the design area, quotient (Q) will be equal to or greater than 1 and coverage is adequate. If Q is less than 1, the design area exceeds the pattern area of individual fixtures. Adjust the heater locations and patterns or add additional fixtures with patterns overlapping as necessary, to ensure adequate coverage.
9. **Multiply** quotient (Q in Step 8) by the increase in theoretical temperature (ΔT of Step 3) by the design area (A_D of Step 4) to determine the amount of radiation to be installed.

   Radiation (Watts) = Q x ΔT x A_D
10. **Many Types** of radiant heaters are available for comfort heating applications including ceiling, wall and portable floor standing models. Choose specific fixtures from the product pages. It is preferred that half the wattage requirements be installed on each side of the work station in the design area.

Controls — Manual control by percentage timers may be adequate for a small installation. To provide better control of comfort levels in varying ambient temperatures, divide the total heat required into two or three circuits so that each fixture or heating element circuit can be switched on in sequence. Staging can be accomplished by using multistage air thermostats set at different temperatures.

Indoor Area Heating

In many industrial environments, area heating (areas with length or width greater than 50 ft) can be accomplished economically with multiple infrared heaters. For quick estimates, determine the minimum inside temperature and use a factor of 0.5 watts per square foot of design area for each degree of theoretical temperature. If the calculated heat loss of the structure, including infiltration or ventilation air, is less than the quick estimate, select the lower value. Locate heaters uniformly throughout the area with at least a 30% overlap in radiation pattern.

Outdoor Spot Heating

The same guidelines outlined under Indoor Spot Heating should be followed except that watts per square foot for each degree of theoretical ambient temperature increase should be doubled (approximately 2 watts per square foot for each 1°F). This factor applies to outdoor heating applications with little or no wind chill effect on personnel. If wind velocities are a factor in the application, determine the equivalent air temperature from the Wind Chill Chart in NEMA publication HE3-1971 or other information source.

Note — Increasing the infrared radiation to massive levels to offset wind chill can create discomfort and thermal stress. In outdoor exposed applications, a wind break or shielding is usually more effective.

Technical Information

Watt Density for Typical Applications vs. Temperature Rise

Application	Condition	Density Watts / Square Foot Desired Comfort Tmperature Rise ˚F				
		5°F	10°F	15°F	20°F	25°F
Indoor Supplementry Heat		15 to 30 Watts / Square Foot				
Indoor Personnel Comfort	No Drafts/No Cold Walls	5 to 6	11 to 13	17 to 20	22 to 26	28 to 33
Indoor Personnel Comfort	Average Conditions	7 to 9	15 to 18	23 to 28	30 to 36	39 to 47
Indoor Personnel Comfort	Drafty Are/Cold Walls	10 to 12	20 to 24	30 to 36	40 to 48	50 to 60
Indoor Personnel Comfort	Large Mall Type Buildings	40 TO 60 WATTS / SQUARE FOOT				
Indoor Moisture	Removal and Control	15 TO 30 WATTS / SQUARE FOOT				
Outdoor Loading Dock	Protected Area W/Wind Shield	80 TO 120 WATTS / SQUARE FOOT				
Outdoor Marquee Heating	Snow & Ice Melting 20 ft. Mounting Hgt.	Use Table B				
Outdoor Personnel Comfort	Not Open To Sky Protected Area No Wind	10 to 12	20 to 24	30 to 36	40 to 48	50 to 60
Radiant Fixtures for spot heating of individuals should be mounted 10 to 12 feet from the floor with coverage from at least two (2) sides and directed at the individuals waist and never directly overhead. If fixture must be mounted over 12' from the floor, add 25% to the indicated watt density up to a maximum of 15'.						

Snow Control Design Guidelines

Outside Design Temperature (˚F)	Annual Snowfall Inches	Exposed* w/ sq.ft.	Semi-Protected* w/ sq.ft.	Protected* w/ sq.ft.
-20 to -60	80 to 115	200	185	160
-20 to -60	50 to 79	175	160	145
-20 to -60	20 to 49	125	110	100
-20 to -60	10 to 19	110	100	90
-20 to -60	0 to 9	100	90	85
-10 to -19	80 to 115	175	160	145
-10 to -19	50 to 79	125	110	100
-10 to -19	20 to 49	110	100	90
-10 to -19	10 to 19	100	90	85
-10 to -19	0 to 9	100	80	75
0 to -9	80 to 115	125	110	100
0 to -9	50 to 79	110	100	90
0 to -9	20 to 49	100	90	85
0 to -9	10 to 19	100	80	75
0 to -9	0 to 9	100	70	65
19 to 1	80 to 115	110	100	90
19 to 1	50 to79	100	90	85
19 to 1	20 to 49	100	80	75
19 to 1	10 to 19	100	70	65
19 to 1	0 to 9	100	70	60
40 to 18	80 to 115	100	70	60
40 to 18	50 to 79	100	70	60
40 to 18	20 to 49	100	70	60
40 to 18	10 to 19	100	70	60
40 to 18	0 to 9	100	70	60

* Exposed = Totally open area
* Semi-Protected = One side closed plus roof or overhang
* Protected = Three sides plus roof or overhang

Heater Selection Guidelines

1. Always use clear quartz lamps as the correct element selection
2. Use CRDS or CRTS stainless steel enclosures for outdoor locations
3. For best results use 30˚ symmetric units. 60˚ symmetric or assymetric enclosures are generally satisfactory in semi-protected or shielded areas. **Never use 90˚ reflectors.**

Technical Information

90° Symmetrical Reflector Table for Single Element RBC-1

Mounting Height Ft.	Area (WxL) Ft.	Square Ft.	Metal Sheath Element Radiant Efficiency 60%			
			1 kW w/sq. ft.	1.5 kW w/sq. ft.	2 kW w/sq. ft.	2.5 kW w/sq. ft.
8	16 X 16	256	2.3	3.5	4.7	5.9
9	18 X 18	324	1.9	2.8	3.7	4.6
10	20 X 20	400	1.5	2.3	3.0	3.8
11	22 X 22	484	1.2	1.9	2.5	3.1
12	24 X 24	576	1.0	1.6	2.1	2.6
13	26 X 26	676	0.9	1.3	1.8	2.2
14	28 X 28	784	0.8	1.1	1.5	1.9
15	30 X 30	900	0.7	1.0	1.3	1.7

60° Symmetrical Reflector Table for 1 and 3 Element STAR Infrared Heaters

Mounting Height Ft.	Area (WxL) Ft.	Square Ft.	Metal Sheath Element Radiant Efficiency 60%%				
			1.5 kW w/sq. ft.	2 kW w/sq. ft.	4.5 kW w/sq. ft.	6 kW w/sq. ft.	13.5 kW w/sq. ft.
8	9.2 X 9.2	85	10.6	14.2	31.9	42.5	95.7
9	10.35 X 10.35	107	8.4	11.2	25.2	33.6	75.6
10	11.5 X 11.5	132	6.8	9.1	20.4	27.2	61.2
11	12.65 X 12.65	160	5.6	7.5	16.9	22.5	50.6
12	13.8 X 13.8	190	4.7	6.3	14.2	18.9	42.5
13	14.95 X 14.95	224	4.0	5.4	12.1	16.1	36.2
14	16.1 X 16.1	259	3.5	4.6	10.4	13.9	31.2
15	17.25 X 17.25	298	3.0	4.0	9.1	12.1	27.2
16	18.4 X 18.4	339	2.7	3.5	8.0	10.6	23.9
17	19.55 X 19.55	382	2.4	3.1	7.1	9.4	21.2
18	20.7 X 20.7	428	2.1	2.8	6.3	8.4	18.9
19	21.85 X 21.85	477	1.9	2.5	5.7	7.5	17.0
20	23 X 23	529	1.7	2.3	5.1	6.8	15.3
21	24.15 X 24.15	583	1.5	2.1	4.6	6.2	13.9
22	25.3 X 25.3	640	1.4	1.9	4.2	5.6	12.7
23	26.45 X 26.45	700	1.3	1.7	3.9	5.1	11.6
24	27.6 X 27.6	762	1.2	1.6	3.5	4.7	10.6

Technical Information

90° Symmetrical Reflectors for 2 & 3 Element High-Intensity Infrared Heaters

			METAL SHEATH ELEMENT RADIANT EFFICIENCY 60%					
			24" Enclosure		33" Enclosure		46" Enclosure	
Mounting Height Ft.	Area (W X L) Ft.	Square Ft.	2 Element 1.6 KW w/sq.ft.	3 Element 2.5 KW w/sq.ft.	2 Element 3 KW w/sq.ft.	3 Element 4.5 KW w/sq.ft.	2 Element 4 KW w/sq.ft.	3 Element 6 KW w/sq.ft.
5	10 X 10	100	9.6	15.0	18.0	27.0	24.0	36.0
6	12 X 12	144	6.7	10.4	12.5	18.8	16.7	25.0
7	14 X 14	196	4.9	7.7	9.2	13.8	12.2	18.4
8	16 X 16	256	3.8	5.9	7.0	10.5	9.4	14.1
9	18 X 18	324	3.0	4.6	5.6	8.3	7.4	11.1
10	20 X 20	400	2.4	3.8	4.5	6.8	6.0	9.0
11	22 X 22	484	2.0	3.1	3.7	5.6	5.0	7.4
12	24 X 24	576	1.7	2.6	3.1	4.7	4.2	6.3
13	26 X 26	676	1.4	2.2	2.7	4.0	3.6	5.3
14	28 X 28	784	1.2	1.9	2.3	3.4	3.1	4.6
15	30 X 30	900	1.1	1.7	2.0	3.0	2.7	4.0
16	32 X 32	1024		1.5	1.8	2.6	2.3	3.5
17	34 X 34	1156		1.3	1.6	2.3	2.1	3.1
18	36 X 36	1296		1.2	1.4	2.1	1.9	2.8
19	38 X 38	1444		1.0	1.2	1.9	1.7	2.5
20	40 X 40	1600			1.1	1.7	1.5	2.3

			QUARTZ TUBE ELEMENT RADIANT EFFICIENCY 80%					
			24" Enclosure		33" Enclosure		46" Enclosure	
Mounting Height Ft.	Area (W X L) Ft.	Square Ft.	2 Element 2 KW w/sq.ft.	3 Element 3 KW w/sq.ft.	2 Element 4 KW w/sq.ft.	3 Element 6 KW w/sq.ft.	2 Element 6 KW w/sq.ft.	3 Element 9 KW w/sq.ft.
5	10 X 10	100	16.0	24.0	32.0	48.0	48.0	72.0
6	12 X 12	144	11.1	16.7	22.2	33.3	33.3	50.0
7	14 X 14	196	8.2	7.7	16.3	24.5	24.5	36.7
8	16 X 16	256	6.3	12.2	12.5	18.8	18.8	28.1
9	18 X 18	324	4.9	9.4	9.9	14.8	14.8	22.2
10	20 X 20	400	4.0	6.0	8.0	12.0	12.0	18.0
11	22 X 22	484	3.3	5.0	6.6	9.9	9.9	14.9
12	24 X 24	576	2.8	4.2	5.6	8.3	8.3	12.5
13	26 X 26	676	2.4	3.6	4.7	7.1	7.1	10.7
14	28 X 28	784	2.0	3.1	4.1	6.1	6.1	9.2
15	30 X 30	900	1.8	2.7	3.6	5.3	5.3	8.0
16	32 X 32	1024	1.6	2.3	3.1	4.7	4.7	7.0
17	34 X 34	1156	1.4	2.1	2.8	4.2	4.2	6.2
18	36 X 36	1296	1.2	1.9	2.5	3.7	3.7	5.6
19	38 X 38	1444	1.1	1.7	2.2	3.3	3.3	5.0
20	40 X 40	1600	1.0	1.5	2.0	3.0	3.0	4.5

			QUARTZ LAMP ELEMENT RADIANT EFFICIENCY 80%					
			24" Enclosure		33" Enclosure		46" Enclosure	
Mounting Height Ft.	Area (W X L) Ft.	Square Ft.	2 Element 3.2 KW w/sq.ft.	3 Element 4.8 KW w/sq.ft.	2 Element 5 KW w/sq.ft.	3 Element 7.5 KW w/sq.ft.	2 Element 7.3 KW w/sq.ft.	3 Element 10.95 KW w/sq.ft.
5	10 X 10	100	25.6	38.4	40.0	60.0	58.4	87.6
6	12 X 12	144	17.8	26.7	27.8	41.7	40.6	60.8
7	14 X 14	196	13.1	19.6	20.4	30.6	29.8	44.7
8	16 X 16	256	10.0	15.0	15.6	23.4	22.8	34.2
9	18 X 18	324	7.9	11.9	12.3	18.5	18.0	27.0
10	20 X 20	400	6.4	9.6	10.0	15.0	14.6	21.9
11	22 X 22	484	5.3	7.9	8.3	12.4	12.1	18.1
12	24 X 24	576	4.4	6.7	6.9	10.4	10.1	15.2
13	26 X 26	676	3.8	5.7	5.9	8.9	8.6	13.0
14	28 X 28	784	3.3	4.9	5.1	7.7	7.4	11.2
15	30 X 30	900	2.8	4.3	4.4	6.7	6.5	9.7
16	32 X 32	1024	2.5	3.8	3.9	5.9	5.7	8.6
17	34 X 34	1156	2.2	3.3	3.5	5.2	5.1	7.6
18	36 X 36	1296	2.0	3.0	3.1	4.6	4.5	6.8
19	38 X 38	1444	1.8	2.7	2.8	4.2	4.0	6.1
20	40 X 40	1600	1.6	2.4	2.5	3.8	3.7	5.5

Technical Information

60° Symmetrical Reflectors for 2 & 3 Element High-Intensity Infrared Heaters

			METAL SHEATH ELEMENT RADIANT EFFICIENCY 60%					
			24" Enclosure		33" Enclosure		46" Enclosure	
Mounting Height Ft.	Area (W X L) Ft.	Square Ft.	2 Element 1.6 KW w/sq.ft.	3 Element 2.5 KW w/sq.ft.	2 Element 3 KW w/sq.ft.	3 Element 4.5 KW w/sq.ft.	2 Element 4 KW w/sq.ft.	3 Element 6 KW w/sq.ft.
5	5.8 X 10	57.5	16.7	26.1	31.3	47.0	41.7	62.6
6	6.9 X 12	82.8	11.6	18.1	21.7	32.6	29.0	43.5
7	8.1 X 14	112.7	8.5	13.3	16.0	24.0	21.3	31.9
8	9.2 X 16	147.2	6.5	10.2	12.2	18.3	16.3	24.5
9	10.4 X 18	186.3	5.2	8.1	9.7	14.5	12.9	19.3
10	11.5 X 20	230.0	4.2	6.5	7.8	11.7	10.4	15.7
11	12.7 X 22	278.3	3.4	5.4	6.5	9.7	8.6	12.9
12	13.8 X 24	331.2	2.9	4.5	5.4	8.2	7.2	10.9
13	15.0 X 26	388.7	2.5	3.9	4.6	6.9	6.2	9.3
14	16.1 X 28	450.8	2.1	3.3	4.0	6.0	5.3	8.0
15	17.3 X 30	517.5	1.9	2.9	3.5	5.2	4.6	7.0
16	18.4 X 32	588.8	1.6	2.5	3.1	4.6	4.1	6.1
17	19.6 X 34	664.7	1.4	2.3	2.7	4.1	3.6	5.4
18	20.7 X 36	745.2	1.3	2.0	2.4	3.6	3.2	4.8
19	21.9 X 38	830.3	1.2	1.8	2.2	3.3	2.9	4.3
20	23.0 X 40	920.0	1.0	1.6	2.0	2.9	2.6	3.9

			QUARTZ TUBE ELEMENT RADIANT EFFICIENCY 80%					
			24" Enclosure		33" Enclosure		46" Enclosure	
Mounting Height Ft.	Area (W X L) Ft.	Square Ft.	2 Element 2 KW w/sq.ft.	3 Element 3 KW w/sq.ft.	2 Element 4 KW w/sq.ft.	3 Element 6 KW w/sq.ft.	2 Element 6 KW w/sq.ft.	3 Element 9 KW w/sq.ft.
5	5.8 X 10	57.5	27.8	41.7	55.7	83.5	83.5	125.2
6	6.9 X 12	82.8	19.3	29.0	38.6	58.0	58.0	87.0
7	8.1 X 14	112.7	14.2	21.3	28.4	42.6	42.6	63.9
8	9.2 X 16	147.2	10.9	16.3	21.7	32.6	32.6	48.9
9	10.4 X 18	186.3	8.6	12.9	17.2	25.8	25.8	38.6
10	11.5 X 20	230.0	7.0	10.4	13.9	20.9	20.9	31.3
11	12.7 X 22	278.3	5.7	8.6	11.5	17.2	17.2	25.9
12	13.8 X 24	331.2	4.8	7.2	9.7	14.5	14.5	21.7
13	15.0 X 26	388.7	4.1	6.2	8.2	12.3	12.3	18.5
14	16.1 X 28	450.8	3.5	5.3	7.1	10.6	10.6	16.0
15	17.3 X 30	517.5	3.1	4.6	6.2	9.3	9.3	13.9
16	18.4 X 32	588.8	2.7	4.1	5.4	8.2	8.2	12.2
17	19.6 X 34	664.7	2.4	3.6	4.8	7.2	7.2	10.8
18	20.7 X 36	745.2	2.1	3.2	4.3	6.4	6.4	9.7
19	21.9 X 38	830.3	1.9	2.9	3.9	5.8	5.8	8.7
20	23.0 X 40	920.0	1.7	2.6	3.5	5.2	5.2	7.8

			QUARTZ LAMP ELEMENT RADIANT EFFICIENCY 80%					
			24" Enclosure		33" Enclosure		46" Enclosure	
Mounting Height Ft.	Area (W X L) Ft.	Square Ft.	2 Element 3.2 KW w/sq.ft.	3 Element 4.8 KW w/sq.ft.	2 Element 5 KW w/sq.ft.	3 Element 7.5 KW w/sq.ft.	2 Element 7.3 KW w/sq.ft.	3 Element 10.95 KW w/sq.ft.
5	5.8 X 10	57.5	44.5	66.8	69.6	104.3	101.6	152.3
6	6.9 X 12	82.8	30.9	46.4	48.3	72.5	70.5	105.8
7	8.1 X 14	112.7	22.7	34.1	35.5	53.2	51.8	77.7
8	9.2 X 16	147.2	17.4	26.1	27.2	40.8	39.7	59.5
9	10.4 X 18	186.3	13.7	20.6	21.5	32.2	31.3	47.0
10	11.5 X 20	230.0	11.1	16.7	17.4	26.1	25.4	38.1
11	12.7 X 22	278.3	9.2	13.8	14.4	21.6	21.0	31.5
12	13.8 X 24	331.2	7.7	11.6	12.1	18.1	17.6	26.4
13	15.0 X 26	388.7	6.6	9.9	10.3	15.4	15.0	22.5
14	16.1 X 28	450.8	5.7	8.5	8.9	13.3	13.0	19.4
15	17.3 X 30	517.5	4.9	7.4	7.7	11.6	11.3	16.9
16	18.4 X 32	588.8	4.3	6.5	6.8	10.2	9.9	14.9
17	19.6 X 34	664.7	3.9	5.8	6.0	9.0	8.8	13.2
18	20.7 X 36	745.2	3.4	5.2	5.4	8.1	7.8	11.8
19	21.9 X 38	830.3	3.1	4.6	4.8	7.2	7.0	10.6
20	23.0 X 40	920.0	2.8	4.2	4.3	6.5	6.3	9.5

Technical Information

30° Symmetrical Reflectors for 2 & 3 Element High-Intensity Infrared Heaters

			METAL SHEATH ELEMENT RADIANT EFFICIENCY 60%					
			24" Enclosure		33" Enclosure		46" Enclosure	
Mounting Height Ft.	Area (W X L) Ft.	Square Ft.	2 Element 1.6 KW w/sq.ft.	3 Element 2.5 KW w/sq.ft.	2 Element 3 KW w/sq.ft.	3 Element 4.5 KW w/sq.ft.	2 Element 4 KW w/sq.ft.	3 Element 6 KW w/sq.ft.
5	2.7 X 10	27.0	35.6	55.6	66.7	100.0	88.9	133.3
6	3.2 X 12	38.9	24.7	38.6	46.3	69.4	61.7	92.6
7	3.8 X 14	52.9	18.1	28.3	34.0	51.0	45.4	68.0
8	4.3 X 16	69.1	13.9	21.7	26.0	39.1	34.7	52.1
9	4.9 X 18	87.5	11.0	17.1	20.6	30.9	27.4	41.2
10	5.4 X 20	108.0	8.9	13.9	16.7	25.0	22.2	33.3
11	5.9 X 22	130.7	7.3	11.5	13.8	20.7	18.4	27.5
12	6.5 X 24	155.5	6.2	9.6	11.6	17.4	15.4	23.1
13	7.0 X 26	182.5	5.3	8.2	9.9	14.8	13.1	19.7
14	7.6 X 28	211.7	4.5	7.1	8.5	12.8	11.3	17.0
15	8.1 X 30	243.0	4.0	6.2	7.4	11.1	9.9	14.8
16	8.6 X 32	276.5	3.5	5.4	6.5	9.8	8.7	13.0
17	9.2 X 34	312.1	3.1	4.8	5.8	8.7	7.7	11.5
18	9.7 X 36	349.9	2.7	4.3	5.1	7.7	6.9	10.3
19	10.3 X 38	389.9	2.5	3.8	4.6	6.9	6.2	9.2
20	10.8 X 40	432.0	2.2	3.5	4.2	6.3	5.6	8.3

			QUARTZ TUBE ELEMENT RADIANT EFFICIENCY 80%					
			24" Enclosure		33" Enclosure		46" Enclosure	
Mounting Height Ft.	Area (W X L) Ft.	Square Ft.	2 Element 2 KW w/sq.ft.	3 Element 3 KW w/sq.ft.	2 Element 4 KW w/sq.ft.	3 Element 6 KW w/sq.ft.	2 Element 6 KW w/sq.ft.	3 Element 9 KW w/sq.ft.
5	2.7 X 10	27.0	59.3	88.9	118.5	177.8	177.8	266.7
6	3.2 X 12	38.9	41.2	61.7	82.3	123.5	123.5	185.2
7	3.8 X 14	52.9	30.2	45.4	60.5	90.7	90.7	136.1
8	4.3 X 16	69.1	23.1	34.7	46.3	69.4	69.4	104.2
9	4.9 X 18	87.5	18.3	27.4	36.6	54.9	54.9	82.3
10	5.4 X 20	108.0	14.8	22.2	29.6	44.4	44.4	66.7
11	5.9 X 22	130.7	12.2	18.4	24.5	36.7	36.7	55.1
12	6.5 X 24	155.5	10.3	15.4	20.6	30.9	30.9	46.3
13	7.0 X 26	182.5	8.8	13.1	17.5	26.3	26.3	39.4
14	7.6 X 28	211.7	7.6	11.3	15.1	22.7	22.7	34.0
15	8.1 X 30	243.0	6.6	9.9	13.2	19.8	19.8	29.6
16	8.6 X 32	276.5	5.8	8.7	11.6	17.4	17.4	26.0
17	9.2 X 34	312.1	5.1	7.7	10.3	15.4	15.4	23.1
18	9.7 X 36	349.9	4.6	6.9	9.1	13.7	13.7	20.6
19	10.3 X 38	389.9	4.1	6.2	8.2	12.3	12.3	18.5
20	10.8 X 40	432.0	3.7	5.6	7.4	11.1	11.1	16.7

			QUARTZ LAMP ELEMENT RADIANT EFFICIENCY 80%					
			24" Enclosure		33" Enclosure		46" Enclosure	
Mounting Height Ft.	Area (W X L) Ft.	Square Ft.	2 Element 3.2 KW w/sq.ft.	3 Element 4.8 KW w/sq.ft.	2 Element 5 KW w/sq.ft.	3 Element 7.5 KW w/sq.ft.	2 Element 7.3 KW w/sq.ft.	3 Element 10.95 KW w/sq.ft.
5	2.7 X 10	27.0	94.8	142.2	148.1	222.2	216.3	324.4
6	3.2 X 12	38.9	65.8	98.8	102.9	154.3	150.2	225.3
7	3.8 X 14	52.9	48.4	72.6	75.6	113.4	110.4	165.5
8	4.3 X 16	69.1	37.0	55.6	57.9	86.8	84.5	126.7
9	4.9 X 18	87.5	29.3	43.9	45.7	68.6	66.8	100.1
10	5.4 X 20	108.0	23.7	35.6	37.0	55.6	54.1	81.1
11	5.9 X 22	130.7	19.6	29.4	30.6	45.9	44.7	67.0
12	6.5 X 24	155.5	16.5	24.7	25.7	38.6	37.6	56.3
13	7.0 X 26	182.5	14.0	21.0	21.9	32.9	32.0	48.0
14	7.6 X 28	211.7	12.1	18.1	18.9	28.3	27.6	41.4
15	8.1 X 30	243.0	10.5	15.8	16.5	24.7	24.0	36.0
16	8.6 X 32	276.5	9.3	13.9	14.5	21.7	21.1	31.7
17	9.2 X 34	312.1	8.2	12.3	12.8	19.2	18.7	28.1
18	9.7 X 36	349.9	7.3	11.0	11.4	17.1	16.7	25.0
19	10.3 X 38	389.9	6.6	9.8	10.3	15.4	15.0	22.5
20	10.8 X 40	432.0	5.9	8.9	9.3	13.9	13.5	20.3

Technical Information

60° Asymmetrical Reflectors for 2 & 3 Element High-Intensity Infrared Heaters

			METAL SHEATH ELEMENT RADIANT EFFICIENCY 60%					
			24" Enclosure		33" Enclosure		46" Enclosure	
Mounting Height Ft.	Area (W X L) Ft.	Square Ft.	2 Element 1.6 KW w/sq.ft.	3 Element 2.5 KW w/sq.ft.	2 Element 3 KW w/sq.ft.	3 Element 4.5 KW w/sq.ft.	2 Element 4 KW w/sq.ft.	3 Element 6 KW w/sq.ft.
5	6 X 10	63	15.4	24.0	28.8	43.2	38.4	57.6
6	8 X 12	90	10.7	16.7	20.0	30.0	26.7	40.0
7	9 X 14	123	7.8	12.2	14.7	22.0	19.6	29.4
8	10 X 16	160	6.0	9.4	11.3	16.9	15.0	22.5
9	11 X 18	203	4.7	7.4	8.9	13.3	11.9	17.8
10	13 X 20	250	3.8	6.0	7.2	10.8	9.6	14.4
11	14 X 22	303	3.2	5.0	6.0	8.9	7.9	11.9
12	15 X 24	360	2.7	4.2	5.0	7.5	6.7	10.0
13	16 X 26	423	2.3	3.6	4.3	6.4	5.7	8.5
14	18 X 28	490	2.0	3.1	3.7	5.5	4.9	7.3
15	19 X 30	563	1.7	2.7	3.2	4.8	4.3	6.4
16	20 X 32	640	1.5	2.3	2.8	4.2	3.8	5.6
17	21 X 34	723	1.3	2.1	2.5	3.7	3.3	5.0
18	23 X 36	810	1.2	1.9	2.2	3.3	3.0	4.4
19	24 X 38	903	1.1	1.7	2.0	3.0	2.7	4.0
20	25 X 40	1000	1.0	1.5	1.8	2.7	2.4	3.6

			QUARTZ TUBE ELEMENT RADIANT EFFICIENCY 80%					
			24" Enclosure		33" Enclosure		46" Enclosure	
Mounting Height Ft.	Area (W X L) Ft.	Square Ft.	2 Element 2 KW w/sq.ft.	3 Element 3 KW w/sq.ft.	2 Element 4 KW w/sq.ft.	3 Element 6 KW w/sq.ft.	2 Element 6 KW w/sq.ft.	3 Element 9 KW w/sq.ft.
5	6 X 10	63	25.6	38.4	51.2	76.8	76.8	115.2
6	8 X 12	90	17.8	26.7	35.6	53.3	53.3	80.0
7	9 X 14	123	13.1	19.6	26.1	39.2	39.2	58.8
8	10 X 16	160	10.0	15.0	20.0	30.0	30.0	45.0
9	11 X 18	203	7.9	11.9	15.8	23.7	23.7	35.6
10	13 X 20	250	6.4	9.6	12.8	19.2	19.2	28.8
11	14 X 22	303	5.3	7.9	10.6	15.9	15.9	23.8
12	15 X 24	360	4.4	6.7	8.9	13.3	13.3	20.0
13	16 X 26	423	3.8	5.7	7.6	11.4	11.4	17.0
14	18 X 28	490	3.3	4.9	6.5	9.8	9.8	14.7
15	19 X 30	563	2.8	4.3	5.7	8.5	8.5	12.8
16	20 X 32	640	2.5	3.8	5.0	7.5	7.5	11.3
17	21 X 34	723	2.2	3.3	4.4	6.6	6.6	10.0
18	23 X 36	810	2.0	3.0	4.0	5.9	5.9	8.9
19	24 X 38	903	1.8	2.7	3.5	5.3	5.3	8.0
20	25 X 40	1000	1.6	2.4	3.2	4.8	4.8	7.2

			QUARTZ LAMP ELEMENT RADIANT EFFICIENCY 80%					
			24" Enclosure		33" Enclosure		46" Enclosure	
Mounting Height Ft.	Area (W X L) Ft.	Square Ft.	2 Element 3.2 KW w/sq.ft.	3 Element 4.8 KW w/sq.ft.	2 Element 5 KW w/sq.ft.	3 Element 7.5 KW w/sq.ft.	2 Element 7.3 KW w/sq.ft.	3 Element 10.95 KW w/sq.ft.
5	6 X 10	63	41.0	61.4	64.0	96.0	93.4	140.2
6	8 X 12	90	28.4	42.7	44.4	66.7	64.9	97.3
7	9 X 14	123	20.9	31.3	32.7	49.0	47.7	71.5
8	10 X 16	160	16.0	24.0	25.0	37.5	36.5	54.8
9	11 X 18	203	12.6	19.0	19.8	29.6	28.8	43.3
10	13 X 20	250	10.2	15.4	16.0	24.0	23.4	35.0
11	14 X 22	303	8.5	12.7	13.2	19.8	19.3	29.0
12	15 X 24	360	7.1	10.7	11.1	16.7	16.2	24.3
13	16 X 26	423	6.1	9.1	9.5	14.2	13.8	20.7
14	18 X 28	490	5.2	7.8	8.2	12.2	11.9	17.9
15	19 X 30	563	4.6	6.8	7.1	10.7	10.4	15.6
16	20 X 32	640	4.0	6.0	6.3	9.4	9.1	13.7
17	21 X 34	723	3.5	5.3	5.5	8.3	8.1	12.1
18	23 X 36	810	3.2	4.7	4.9	7.4	7.2	10.8
9	24 X 38	903	2.8	4.3	4.4	6.6	6.5	9.7
20	25 X 40	1000	2.6	3.8	4.0	6.0	5.8	8.8

Heat Tracing Products

Applications

Electric Heat Tracing Products

Chromalox heating cable line includes cables suitable for most process maintenance, pipe and vessel freeze protection and roof and gutter de-icing applications.

Industrial Heating Cables are ideal for process maintenance applications. Maintenance temperatures up to 900°F can be achieved in a variety of hazardous and corrosive environments. Industrial Cables include:

SRL — Self-Regulating, Low Temperature

SRM/E — Self-Regulating, Medium Temperature Enhanced

CWM — Constant Wattage, Medium Temperature

MI — Mineral Insulation, High Temperature.

Commercial Application Cables are designed to meet specific needs of winterizing applications such as water line freeze protection and preventing ice damage to building structures. Commercial Cables include:

SRF — Self-Regulating Freeze Protection

SRF-RG — Self-Regulating Roof and Gutter Freeze Protection

Industrial Process Maintenance Applications

When industrial process piping and vessels must be maintained above the ambient air temperature, Chromalox has the heating cable to fit the application. Cables range in the maximum maintenance temperature from 150°F for SRL to 900°F for MI cables.

- Petroleum Refineries — Maintain petroleum and by-products at process temperature
- Waste Water Treatment Facilities — Prevent the precipitation of NaOH from solutions
- Food Processing Plants — Maintain viscosity of products in processes such as chocolate, oils and tallow
- Instrument Lines
- Storage Tanks
- Div. 1 and Div. 2 Hazardous Location Applications (Contact your Local Chromalox Sales office for Div. 1 applications)
- Freeze Protection of Steam Cleaned Lines
- Power Generating Plants — Trace steam condensate lines and other chemical additive lines
- Asphalt Lines

Commercial Applications

In a large number of regions in the world, buildings are susceptible to damage caused by water freezing. Primarily, this damage involves either the bursting of pipes or structural damage due to the weight of ice and snow building up on the roof. Chromalox Commercial Application Cables are intended to prevent this damage.

- Cooling Tower Pipes
- Parking Garage Drain Lines
- Chiller Water Lines
- Exposed Pipe Traps
- Exposed Storm Water Pipes
- Sump Discharge Pipes and Equipment
- Wet Sprinkler Fire Systems, where approved by Local Codes
- Outdoor Sports Facilities and Stadiums
- Roof and Gutter De-icing

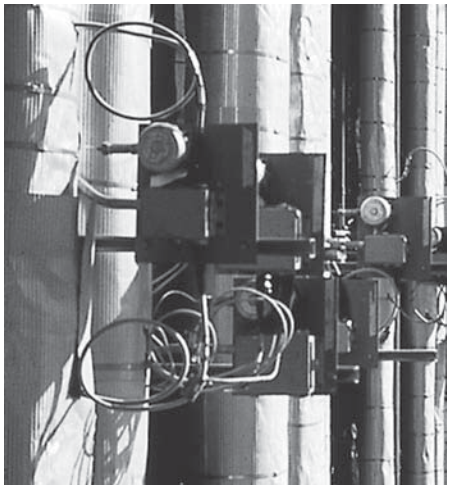

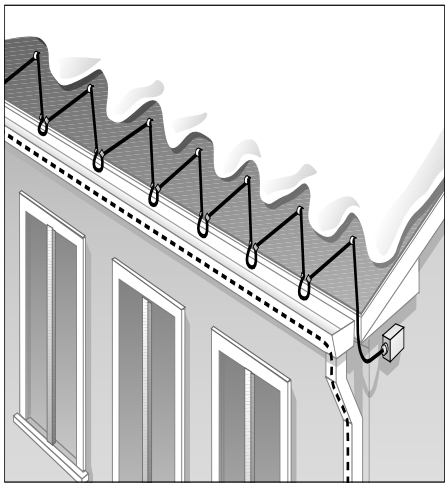

Heat Tracing Products

Industrial & Commercial Grade Cables

Heat Tracing Products — Section Outline

Type	Model	Page
Industrial - Application Guidelines		181
Self-Regulating Low Temperature Medium Temperature	 SRL SRM/E	 83 86
Constant Wattage	CWM	89
Mineral Insulated	MI	92
Hazardous Location Low Temperature Medium Temperature	 HSRL HSRM	 96 99
Self-Regulating Freeze Protection Roof & Gutter	 SRF SRF-RG	 102 107
Snow Melting Controls	APS-4, APS-3B, SC-40 GIT-4, GIT3-A, LCD-1, CIT-1, GIT-1, SIT-6E, RCU-1, EUR-5	109
Connection Accessories		117

Type	Model	Page
DL Series Integrated Connection Accessories	RTPC, RTST, RTES RTPC, RTST, RTES	117
EL Series Standard Connection Accessories	RT-JBC, RT-RST, RT-TST, RT-RES, RT-TES	121
General Application Accessories		123
HL Hazardous Locations Connection Kits	HL-PC, HL-ES HL-S, HL-T	124
B100/E100 Freeze Protection Thermostats		126
EL Series Standard Temperature Controls		129
RBF Heat Trace or Pipe Sensor		128
DL Series Integrated Temperature Controls	RTAS RTBC	129
Electronic Controls & Control Panels	HTLS, HTLSC1D2, HTAS, FPAS, FPASM FPLS, FPLSM	137

Industrial Cable Applications

Self-Regulating

Chromalox SRL and SRM/E Self Regulating Heating Cables provide the most versatility in heat trace designs and applications. Constructed of a semiconductive heater matrix extruded between parallel buss wires, a self- regulating cable adjusts its output to independently respond to temperatures all along its length. As temperatures increase, the heater's resistance increases which lowers the output wattage. Conversely, as the temperature decreases, the resistance decreases and the cable produces more heat. The result — an energy efficient heating cable.

Self-regulating cables are flexible, can be cut-to-length in the field and can be single overlapped without fear of burnout in areas where complex piping and equipment require additional heat trace cable.

Chromalox manufactures low (SRL) and medium (SRM/E) temperature self-regulating heating cable for use on 120 and 208 to 277V. Equipped with a ground braid and optional TPR or FEP jacket, Chromalox self-regulating cables are third party tested and approved for use in harsh corrosive and hazardous applications.

Constant Wattage

Chromalox CWM Constant Wattage Heating Cables are ideally suited for applications where a particular watt density is required at all times. The heater element consists of a nichrome wire wrapped around parallel, insulated buss wires. At specific intervals, a short section of insulation is removed from alternating buss wires to create connection nodes for the nichrome wire. The result is a network of parallel resistors along the entire length of constant wattage cable.

Constant wattage cables are flexible, can be cut-to-length in the field, and are manufactured for use on voltages from 120 to 480V. Although not suited for overlapping, its constant output makes it an ideal choice for higher temperature applications where higher watt densities are required. Equipped with a ground braid and optional FEP jacket, Chromalox constant wattage cables are third party tested and approved for use in harsh, corrosive and hazardous areas. Contact your Local Chromalox Sales office for hazardous area designs.

Mineral Insulated

Chromalox MI Mineral Insulated Heating Cables are the most rugged heating cable in Chromalox's product line. Constructed of a solid series resistor element embedded in highly compacted mineral insulation, MI cables are built to handle high temperature, high wattage applications. The series resistor and mineral insulation are encased in a metallic jacket of Alloy 825 for high temperature or corrosive applications.

Mineral insulated cables are factory assembled and tested, ensuring the highest quality product. Since the units consist of a series resistor, virtually any wattage/voltage/length cable configuration can be produced within the cable's physical operating limits. Chromalox mineral insulated cables are available for use up to 600V and are tested and approved for use in corrosive and hazardous areas. Optional accessories include pulling eyes and reverse glands. Other special features are also available.

Commercial Cable Applications

Self-Regulating Freeze Protection

Chromalox SRF Self Regulating Freeze Protection Heating Cable is a self-regulating cable designed for the freeze protection of water lines. The self-regulating matrix allows for overlapping and easy field installation. SRF also lowers its output and energy consumption as the temperature increases thus lowering energy costs. The 16 AWG buss wires provide for long circuits which reduce the number of accessories required.

A braided and braided with overjacket construction is available. Braided cable should be used on dry pipes and dry locations. The overjacket construction is suitable for wet locations where occasional exposure to moisture is expected.

SRF heating cable is not for use in hazardous locations. Consult the Industrial Cable Products in this section for cables suitable for hazardous locations.

Self-Regulating Roof & Gutter De-Icing

SRF-RG Heating Cable is specifically designed for roof and gutter de-icing applications. SRF-RG features a self-regulating matrix that reduces output as snow melt requirements decrease or when warm weather is present.

The braided and overjacketed construction provides reliable moisture protection. The 16 AWG buss wires allow ample circuit lengths and rugged design. Accessories are available for mounting to roofs and gutters.

Heat Tracing Products

Application & Selection Guidelines

General Product Summary

This section is designed to assist you in determining the appropriate cable for use in your application.

Step 1 — Collect Required Application Data and Determine Heat Loss

Step 2 — Choose the cable that best meets your specific application parameters based on the summary. Consideration of application temperature, exposure temperature, application requirements and environmental ratings should be made.

Step 3 — Select Heating Cable Wattage Rating

Step 4 — Determine Total Cable Required

Step 5 — Determine Circuits and Circuit Protection

Step 6 — Select Appropriate Accessories

Step 1 — Collect Required Application Data & Determine Heat Loss

Application data required can be split into two categories. The first is the heat loss data. This includes:

- Maintenance Temperature
- Minimum Ambient Temperature
- Pipe Size
- Insulation Type (or K factor)
- Insulation Thickness
- Indoor/Outdoor Installation
- Maximum Expected Wind Speed
- Required Safety Factor.

Refer to the Technical section of this catalog, "Determining Heat Energy Requirements — Pipe & Tank Tracing" for details on performing heat loss calculations. For Commercial Freeze Protection, please see Cable Selection Tables in this section.

The second category of data required is the application and environmental conditions. This includes:

- Maximum Exposure Temperature (Power Off Condition)
- Circuit Length Considerations
- Available Voltage
- Hazardous Area Requirements
- Type of Pipe (Plastic or Metal)
- Chemical Exposure
- Fire Resistance.

Step 2 — Select the Cable

Choose the cable that best fits your specific application parameters and wattage requirements.

Heat Tracing Product Features

Features	Industrial				Commercial	
	SRL	SRM/E	CWM	Alloy 825 MI	SRF	SRF-RG
Max. Maintenance Temp. (°F)	150	302	320	900	100	50
Max. Exposure Temp. (°F) Power Off	185	420	400	1,100	185	185
Max. W/Ft.	10	20	12	50	8	12
Max. Circuit Length (Ft.)	95 - 660	150 - 600	225 - 900	330 - 1,000+	180 - 660	135-540
Buss Wire Size	16	14	12	N/A	16	16
Voltages	120, 208-277	120, 208-277	120, 208-277, 480	Up to 600	120, 208-277	120, 208-277
Hazardous Ratings	Yes	Yes	Yes	Yes	No	No
Usable on Plastic Pipe	Yes	No	No	No	Yes	Yes
Cut-to-Length in Field	Yes	Yes	Yes	No	Yes	Yes
Field Splicable	Yes	Yes	Yes	No	Yes	Yes
Can be Overlapped	Yes	Yes	No	No	Yes	Yes
Output Varies with Temp.	Yes	Yes	No	No	Yes	Yes
Varies Output Along Length	Yes	Yes	No	No	Yes	Yes
Design of System	Simple	Simple	Simple	Involved	Simple	Simple
Installation of System	Easiest	Easiest	Simple	Involved	Easiest	Easiest
Fire Resistance	Fair	Fair	Fair	Excellent	Fair	Fair
Chemical Resistance	See Corrosion Guide, next page					
Size (Max. In.)	0.435 x 0.185	0.5 x 0.2	0.435 x 0.235	0.4	0.435 x 0.185	0.435 x 0.185
Accessories	DL/EL	DL	DL/EL		DL/EL	RG Accessories
Monitor Wire Available	Yes	Contact Factory	Contact Factory	No	No	No
Applications	FL,PL	FL,FH,PL,PH	FL,FH,PL,PH	FL,FH,PL,PH	FL	RG
	FL = Freeze Protection FH = Freeze Protection, High Exposure Temperature PL = Process Maintenance, Low Temperature PH = Process Maintenance, High Temperature RG = Roof and Gutter De-icing					

Heat Tracing Products

Application & Selection Guidelines *(cont'd.)*

Agency Approvals

Cable	UL				CSA				FM						
	Ordinary Area	Class I Div. 2 Groups B, C, D	Class II Div. 2 Groups F, G	Class III Div. 2	Ordinary Area	Class I Div. 2 Groups A, B, C, D	Class II Div. 2 Groups F, G	Class III Div. 2	Ordinary Area	Class I Div. I Groups B, C, D	Class I Div. 2 Groups B, C, D	Class II Div. I Groups F, G	Class II Div. 2 Groups F, G	Class III Div. 1	Class III Div. 2
SRL-C	✓				✓	✓	✓		✓		✓				✓
SRL-CT	✓				✓	✓	✓		✓		✓				✓
SRL-CR	✓				✓	✓	✓		✓		✓				✓
HSRL										✓		✓	✓	✓	
SRM/E-C	✓				✓	✓	✓		✓		✓				✓
SRM/E-CT	✓				✓	✓	✓		✓		✓				✓
HSRM										✓		✓	✓	✓	
CWM-C	✓				✓	✓	✓	✓	✓						
CWM-CT	✓				✓	✓	✓	✓	✓						
MI*	✓	✓	✓	✓	✓	✓	✓	✓	✓		✓				✓
SRF-C	✓				✓				✓						
SRF-CR	✓				✓				✓						
SRF-RG	✓				✓				✓						

For T ratings, refer to individual product pages.
For more specific information, refer to individual product pages.
CF=Contact Factory
*Class I, Division I, Groups B,C & D - UL, CSA, FM - Contact your Local Chromalox Sales office for design assistance.

Corrosion Guide to Select Proper Cable Construction

Exposure To	Industrial						Commercial	
	SRL	SRM/E	HSRL	HSRM	CWM	Alloy 825 MI	SRF	SRF-RG
Moisture	C, CR, CT	C, CT	CT	CT	C, CT	Yes	C, CR	Yes
Aqueous Solutions of Inorganic Compounds	CR, CT	CT	CT	CT	CT	No	No	No
Liquids Organic Chemicals	CT	CT	CT	CT	CT	Yes	No	No
Acids or Bases	CT	CT	CT	CT	CT	No	No	No

Note — This is a recommendation guide. Chromalox cannot warrant any Electric Heat Trace against failure by sheath degradation if such failure is the result of operating conditions beyond the control of the heater manufacturer. It is the responsibility of the purchaser to make the ultimate choice of sheath material based on knowledge of the chemical composition of the corrosive solution, character of materials entering the solution, and controls which maintains the process.

Required Jacket Material

Select the appropriate jacket configuration for the desired level of mechanical and corrosive chemical protection. The CR over-jacket option can be used when additional mechanical protection is desired. The CR over-jacket option is required when the cable can be exposed to aqueous inorganic chemicals. The CT over-jacket option is required when the cable can be exposed to organic chemicals or strong corrosives. Use Corrosion Guide above to determine the correct jacket material option for the cable type selected.

More Information is Available Online on Heat Trace.

Bookmark Your Browser to ***www.chromalox.com*** *and Select* ***Manuals****.*

Heat Tracing Products

Application & Selection Guidelines *(cont'd.)*

Step 3 — Select Heating Cable Wattage Rating

After calculating the heat loss in the pipe and adjusting for any application deviations, you may determine which cable rating to use. If you have selected a self-regulating cable you must adjust the output based on maintenance temperatures, using the Thermal Output Rating Graphs shown on the individual product pages, select the lowest cable rating that will provide the pipe maintenance temperature. **For Example:** A 15 W/Ft. SRM/E cable @ 150°F will output approximately 10 W/Ft. Multiple passes or runs of cable may be required to provide sufficient output per foot calculated in Step 1. This is accomplished with parallel runs of cable or spiraling. Contact your Local Chromalox Sales office

Cable Output vs. Temperature

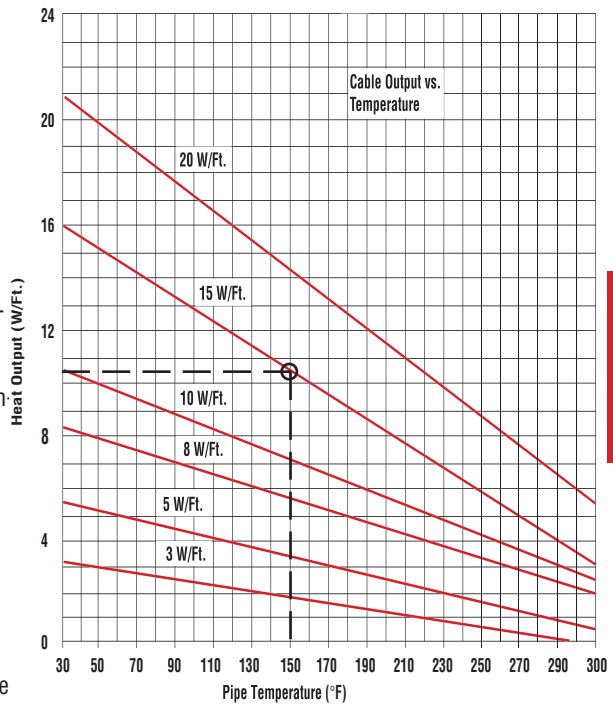

Step 4 — Determine Total Length of Cable Required

The total amount of heating cable is determined by adding the total footage of pipe to be traced and adding for allowances for the components such as flanges, valves, pipe supports; then, multiply by the total number of runs or Wrap Factor determined in Step 3.

(Total Feet of Traced Pipe + Cable Allowance for Components) x # of Runs = Total Cable Length)

Step 5 — Determine Circuits & Circuit Protection

Circuit protection depends on the breaker size being used and the start-up temperature. The National Electric Code (NEC 1996) requires the use of ground fault protection breakers for heating cable. Refer to the specific data of the individual heat trace cable to determine maximum circuit lengths. To determine the number of circuits required for each pipe, divide the total cable length found in Step 4 by the maximum circuit length found in the individual cable data charts. Round up to the next higher number.

$$\text{Number of Circuits} = \frac{\text{Cable Length}}{\text{Maximum Circuit Length}}$$

Pipe Component Cable Allowance Estimation

Component	Cable Allowance Factor (Ft.)	x	# Components	Total Additional Cable
Flange Pair	1.5	x		
Pipe Support	2.0	x		
Butterfly Valve	2.5	x		
Ball Valve	2.7	x		
Globe Valve	4.0	x		
Gate Valve	5.0	x		

Example:

Pipe:	150 feet
Valves:	1 globe valve
Pipe Supports:	2
Flanges:	2
Total Cable Length	= [150 + (1 x 4) + (2 x 2) + (2 x 1.5)] x 2 runs = 161 feet x 2 runs = 322 feet

Heat Tracing Products

Application & Selection Guidelines *(cont'd.)*

Design of Multiple Runs when Heat Requirements Exceed Cable Output Ratings

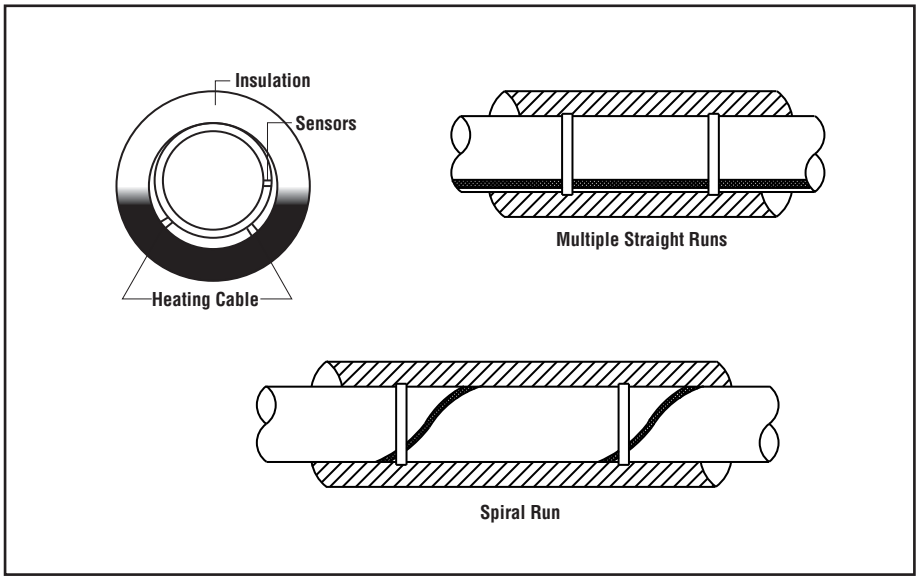

Step 6 — Select Controls & General Application Accessories

Chromalox took a long hard look at the hidden costs that occur in a heat trace project. Indeed this is the labor involved in the installation. Being an innovator, we set out to design a product that went above and beyond what the competition offered while reducing overall installation time and number of parts. The Integrated Connection Accessories (DL) are designed to combine power connections and thermostats in one integrated box. Furthermore, the design offers ease of maintenance and expandability for the future. Of course we offer the standard connection accessories, common to the heat trace industry, which offer lower up front purchase pricing.

Controls

DL — Duraline Integrated Connection Accessories

- Integrated Design — Allows for quick installation with fewer parts
- Lower Man Hours for Installation and Maintenance
- Ease of Maintenance — No replacement of component when doing routine maintenance checks
- Easy to Troubleshoot — Boxes easily open for access to wiring and for taking diagnostic measurements
- Integrated Power Connection and Thermostat — No separate power connection and thermostat box required, resulting in faster installations
- Allows for Future Expansion of System — Because junction, splice and thermostat boxes have multiple cable exits, future cable runs are easily added.

EL — Standard Connection Accessories

- Lower Cost — For use in competitive design and bid installations
- Rugged Cast Junction Box
- Easy to Use Heat Shrink Tubing Kits
- Typical Industry Design — Meets most specifications.

General Application Accessories

For application tape, straps and conduit hubs, refer to the DL & EL General Application Accessories at the end of this section.

For HL kits information, see Product Data Sheet PJ932.

More Information is Available Online on Heat Trace.

Bookmark Your Browser to ***www.chromalox.com*** *and Select* ***Manuals****.*

Technical Information

Determining Heat Energy Requirements

Pipe & Tank Tracing

The following tables can be used to determine the heat losses from insulated pipes and tanks for heat tracing applications. To use these tables, determine the following design factors:

- Temperature differential $\Delta T = T_M - T_A$
  Where:
  T_M = Desired maintenance temperature °F
  T_A = Minimum expected ambient temperature °F
- Type and thickness of insulation
- Diameter of pipe or surface area of tank
- Outdoor or indoor application
- Maximum expected wind velocity (if outdoors).

Pipe Tracing Example — Maintain a 1-1/2 inch IPS pipe at 100°F to keep a process fluid flowing. The pipe is located outdoors and is insulated with 2 inch thick Fiberglas® insulation. The minimum expected ambient temperature is 0°F and the maximum expected wind velocity is 35 mph. Determine heat losses per foot of pipe.

1. **Heat Loss Rate —** Using Table 1, determine the heat loss rate in W/ft of pipe per °F temperature differential. Enter table with insulation ID or IPS pipe size (1-1/2 in.) and insulation thickness (2 in.).
   Rate = 0.038 Watts/ft/°F.
2. **Heat Loss per Foot —** Calculated heat loss per foot of pipe equals the maximum temperature differential (ΔT) times heat loss rate in Watts/ft/°F.

   ΔT = 100°F - 0°F = 100°F
   Q = (ΔT)(heat loss rate per °F)
   Q = (100°F) (0.038 W/ft) = 3.80 W/ft
3. **Insulation Factor —** Table 1 is based on Fiberglas® insulation and a 50°F ΔT. Adjust Q for thermal conductivity (k factor) and temperature as necessary, using adjustment factors from Table 2.

   Adjusted Q = (Q)(1.08) = 3.80 W/ft x 1.08
   Q = 4.10 W/ft
4. **Wind Factor —** Table 1 is based on 20 mph wind velocity. Adjust Q for wind velocity as necessary by adding 5% for each 5 mph over 20 mph. Do not add more than 15% regardless of wind speed.

   Adjusted Q = (Q)(1.15) = 4.10 W/ft x 1.15
   Design heat loss per linear foot
   Q = 4.72 W/ft

Note — For indoor installations, multiply Q by 0.9.

Table 1 — Heat Losses from Insulated Metal Pipes (Watts per foot of pipe per °F temperature differential [1])

Pipe Size (IPS)	Insul. I.D. (In.)	Insulation Thickness (In.)							
		1/2	3/4	1	1-1/2	2	2-1/2	3	4
1/2	0.840	0.054	0.041	0.035	0.028	0.024	0.022	0.020	0.018
3/4	1.050	0.063	0.048	0.040	0.031	0.027	0.024	0.022	0.020
1	1.315	0.075	0.055	0.046	0.036	0.030	0.027	0.025	0.022
1-1/4	1.660	0.090	0.066	0.053	0.041	0.034	0.030	0.028	0.024
1-1/2	1.990	0.104	0.075	0.061	0.046	0.038	0.034	0.030	0.026
2	2.375	0.120	0.086	0.069	0.052	0.043	0.037	0.033	0.029
2-1/2	2.875	0.141	0.101	0.080	0.059	0.048	0.042	0.037	0.032
3	3.500	0.168	0.118	0.093	0.068	0.055	0.048	0.042	0.035
3-1/2	4.000	0.189	0.133	0.104	0.075	0.061	0.052	0.046	0.038
4	4.500	0.210	0.147	0.115	0.083	0.066	0.056	0.050	0.041
—	5.000	0.231	0.161	0.125	0.090	0.072	0.061	0.054	0.044
5	5.563	0.255	0.177	0.137	0.098	0.078	0.066	0.058	0.047
6	6.625	0.300	0.207	0.160	0.113	0.089	0.075	0.065	0.053
—	7.625	0.342	0.235	0.181	0.127	0.100	0.084	0.073	0.059
8	8.625	0.385	0.263	0.202	0.141	0.111	0.092	0.080	0.064
—	9.625	0.427	0.291	0.224	0.156	0.121	0.101	0.087	0.070
10	10.75	0.474	0.323	0.247	0.171	0.133	0.110	0.095	0.076
12	12.75	0.559	0.379	0.290	0.200	0.155	0.128	0.109	0.087
14	14.00	0.612	0.415	0.316	0.217	0.168	0.138	0.118	0.093
16	16.00	0.696	0.471	0.358	0.246	0.189	0.155	0.133	0.104
18	18.00	0.781	0.527	0.401	0.274	0.210	0.172	0.147	0.115
20	20.00	0.865	0.584	0.443	0.302	0.231	0.189	0.161	0.125
24	24.00	1.034	0.696	0.527	0.358	0.274	0.223	0.189	0.147

1. Values in Table 1 are based on a pipe temperature of 50°F, an ambient of 0°F, a wind velocity of 20 mph and a "k" factor of 0.25 (Fiberglas®). Values are calculated using the following formula plus a 10% safety margin:
   Watts/ft of pipe = $2 \pi k (\Delta T) \div (Z) \ln (D_0/D_1)$
   Where: k = Thermal conductivity (Btu/in./hr/ft²/°F) D_1 = Inside diameter of insulation (in.)
   ΔT = Temperature differential (°F) Z^1 = 40.944 Btu/in/W/hr/ft
   D_0 = Outside diameter of insulation (in.) In = Natural Log of D_0/D_1 Quotient

Table 2 — Thermal Conductivity (k) Factor of Typical Pipe Insulation Materials (Btu/in./hr/ft²/°F)

Insulation Type		Pipe Maintenance Temperature (°F)							
		0	50	100	150	200	300	400	500
Fiberglas® or Mineral Fiber Based on ASTM C-547	k value	0.23	0.25	0.27	0.30	0.32	0.37	0.41	0.45
	Adjustment factor	(0.92)	(1.00)	(1.08)	(1.20)	(1.28)	(1.48)	(1.64)	(1.80)
Calcium Silicate[2] Based on ASTMC-533	k value	0.35	0.37	0.40	0.43	0.45	0.50	0.55	0.60
	Adjustment factor	(1.52)	(1.48)	(1.60)	(1.72)	(1.80)	(2.00)	(2.20)	(2.40)
Foamed Glass[2] Based on ASTMC-552	k value	0.38	0.40	0.43	0.47	0.51	0.60	0.70	0.81
	Adjustment factor	(1.52)	(1.60)	(1.72)	(1.88)	(2.04)	(2.40)	(2.8)	(3.24)
Foamed Urethane Based on ASTMC-591	k value	0.18	0.17	0.18	0.21	0.25	Not Recommended		
	Adjustment factor	(0.72)	(0.68)	(0.72)	(0.84)	(1.00)			

2. When using rigid insulation, select an inside diameter one size larger than the pipe on pipe sizes through 9 in. IPS. Over 9 in. IPS, use same size insulation.

Table 3 — Heat Losses from Insulated Metal Tanks (W/ft²/°F)[3]

Insulation Thickness (In.)										
1/2	3/4	1	1-1/2	2	2-1/2	3	3-1/2	4	5	6
0.161	0.107	0.081	0.054	0.040	0.032	0.027	0.023	0.020	0.016	0.013

3. Values in Table 3 are based on a tank temperature of 50°F, an ambient of 0°F, a wind velocity of 20 mph and a "k" factor of 0.25 (Fiberglas®). Values are calculated using the following formula plus a 10% safety margin:
   Watts/ft² = $Y\, k(\Delta T) \div X$ k = Thermal conductivity
   Where: Y = 0.293W/hr/btu X = Thickness of insulation (in.)
   Δ = Temperature differential (°F)

Note — The above information is presented as a guide for solving typical heat tracing applications. Contact your Local Chromalox Sales office for assistance in heater selection and for pipes made of materials other than metal.

Technical Information

Determining Heat Energy Requirements

Pipe & Tank Tracing (cont'd.)

Tank tracing requires an additional calculation of the total exposed surface area. To calculate the surface area:

Cylindrical Tanks —
Area = $2 \pi r^2 + \pi DH$
$A = \pi D (r + H)$

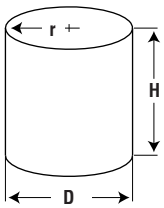

Horizontal Tanks —
Area = 2[(W x L) + (L x H) + (H x W)]

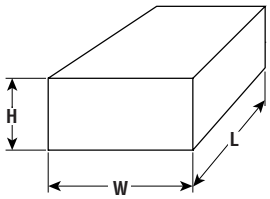

Tank Tracing Example — Maintain a metal tank with 2 inch thick Fiberglas® insulation at 50°F. The tank is located outdoors, is 4 feet in diameter, 12 feet long and is exposed at both ends. The minimum ambient temperature is 0°F and the maximum expected wind speed is 15 mph.

1. **Surface Area —** Calculate the surface area of the tank.
   $A = \pi D (r + H)$
   $A = \pi 4 (2 + 12)$
   $A = 175.9 \text{ ft}^2$

2. **Temperature Differential** (ΔT)

   $\Delta T = T_M - T_A = 50°F - 0°F = 50°F$

3. **Heat Loss Per Foot² —** Obtain the heat loss per square foot per degree from Table 3.

   Heat loss/ft²/°F = 0.04 W/ft²/°F

4. **Insulation Factor —** Table 3 is based on Fiberglas® insulation and a 50°F ΔT. Adjust Q for thermal conductivity (k factor) and temperature as necessary, using factors from Table 2.

5. **Wind Factor —** Table 3 is based on 20 mph wind velocity. Adjust Q for wind velocity as necessary, by adding 5% for each 5 mph over 20 mph. Do not add more than 15% regardless of wind speed. **Note** — For indoor installations, multiply Q by 0.9.

6. **Calculate Total Heat Loss for Tank —** Multiply the adjusted heat loss per square foot per °F figure by the temperature differential. Multiply the loss per square foot by the area.

   $Q = 0.04 \text{ W/ft}^2/°F \times 50°F\ \Delta T = 2 \text{ W/ft}^2$
   Q = Adjusted W/ft² x tank surface area
   $Q = 2 \text{ W/ft}^2 \times 175.9 \text{ ft}^2$

   Heat Loss from Tank = 351.8 Watts

Technical Information

Properties of Steam

Saturated Steam

The thermodynamic properties of saturated steam are shown in the table to the right. Saturated steam is pure steam in direct contact with the liquid water from which it was generated and at the same temperature and pressure as the water. For example, saturated steam at 50 psig has a temperature of 298°F.

Steam pressure is commonly expressed as **psia** or **psig**. Psia is pounds per square inch absolute with reference to a perfect vacuum. Psig is pounds per square inch gauge with reference to atmospheric pressure of 14.7 psi psia = psig + 14.7 psi (1 atmosphere).

The heat content of liquid is the heat energy in Btu/lb required to heat the liquid to the condition indicated starting with water at 32°F.

Latent heat is the heat energy in Btu/lb absorbed when a pound of boiling water is converted to a pound of steam at the same temperature. The same amount of heat is released when the steam condenses back to water at the same temperature. Latent heat varies with temperature.

Saturated Steam — Thermodynamic Properties (nearest even digit)

Gauge Press. (psig)	(°F)	Btu/lb Liquid Heat	Btu/lb Latent Heat	Btu/lb Steam Total	Sat. Vapor (ft^3/lb)	Gauge Press. (psig)	Temp. (°F)	Btu/lb Liquid Heat	Btu/lb Latent Heat	Btu/lb Steam Total	Sat. Vapor (ft^3/lb)
0	212	180	970	1150	27.0	70	316	286	898	1184	5.2
1	216	183	968	1151	25.0	75	320	290	895	1185	4.9
2	219	187	965	1152	24.0	80	324	294	892	1186	4.7
3	222	190	964	1154	22.5	85	328	298	889	1187	4.4
4	224	193	962	1155	21.0	90	331	302	886	1188	4.2
5	227	195	961	1156	20.0	95	335	306	883	1189	4.0
6	230	198	959	1157	19.5	100	338	309	881	1190	3.9
7	232	201	957	1158	18.5	110	344	316	876	1192	3.6
8	235	203	956	1159	18.0	120	350	322	871	1193	3.3
9	237	206	954	1160	17.0	125	353	325	868	1193	3.2
10	240	208	952	1160	16.5	130	356	328	866	1194	3.1
15	250	218	945	1163	14.0	140	361	334	861	1195	2.9
20	259	227	940	1167	12.0	150	366	339	857	1196	2.7
25	267	236	934	1170	10.5	160	371	344	853	1197	2.6
30	274	243	929	1172	9.5	170	375	348	849	1197	2.5
35	281	250	924	1174	8.5	180	380	353	845	1198	2.3
40	287	256	920	1176	8.0	190	384	358	841	1199	2.2
45	292	262	915	1177	7.0	200	388	362	837	1199	2.1
50	298	267	912	1179	6.7	220	395	370	830	1200	2.0
55	303	272	908	1180	6.2	240	403	378	823	1201	1.8
60	307	277	905	1182	5.8	250	406	381	820	1201	1.75
65	312	282	901	1183	5.5	300	422	399	805	1204	1.48

Boiler Feed Water Temperature

The temperature of boiler feed water directly affects the steam output of a boiler. The following table can be used to determine the kilowatt rating of a boiler when the steam load, gauge pressure and boiler feed water temperature are known.

Example — A process requires 450 lbs of steam per hour at 75 psig. The available feed water temperature is 50°F. From the chart, read the kW/lb required for 50°F water and a gauge pressure of 75 psig. Multiply the factor by the pounds of steam: 0.3417 x 450 lbs = 153.8 kW.

Boiler Feed Water Temperature Vs. kW Required per Pound of Steam

Feed Water (°F)	Steam Gauge Pressure (psig) 0	2	10	15	25	40	50	75	100	125	150
40	.3347	.3355	.3375	.3388	.3406	.3422	.3431	.3447	.3458	.3464	.3470
50	.3318	.3326	.3345	.3359	.3376	.3392	.3401	.3417	.3429	.3435	.3441
60	.3288	.3296	.3316	.3329	.3347	.3363	.3372	.3388	.3400	.3407	.3411
70	.3259	.3267	.3287	.3300	.3318	.3334	.3343	.3359	.3370	.3376	.3382
80	.3229	.3238	.3278	.3271	.3288	.3305	.3313	.3329	.3341	.3347	.3353
90	.3200	.3208	.3238	.3242	.3259	.3275	.3284	.3300	.3312	.3318	.3324
100	.3171	.3179	.3199	.3212	.3229	.3246	.3255	.3271	.3283	.3288	.3294
110	.3142	.3150	.317	.3183	.3200	.3217	.3225	.3242	.3253	.3259	.3265
120	.3112	.3210	.314	.3154	.3171	.3187	.3196	.3212	.3224	.3230	.3236
130	.3083	.3091	.3111	.3124	.3142	.3160	.3167	.3183	.3195	.3200	.3206
140	.3054	.3062	.3082	.3095	.3113	.3129	.3137	.3154	.3165	.3171	.3177
150	.3025	.3032	.3052	.3066	.3083	.3099	.3108	.3124	.3136	.3142	.3148
160	.2995	.3003	.3029	.3036	.3054	.3070	.3079	.3095	.3107	.3113	.3118
170	.2966	.2974	.2994	.3001	.3025	.3041	.3050	.3066	.3077	.3083	.3089
180	.2937	.2945	.2964	.2978	.2995	.3011	.3020	.3036	.3048	.3054	.3060
190	.2907	.2915	.2935	.2948	.2966	.2982	.2981	.3007	.3019	.3025	.3030
200	.2878	.2886	.2906	.2919	.2937	.2953	.2962	.2978	.2989	.2995	.3001

Technical Information

Electrical Fundamentals & Three Phase Calculations

Ohm's Law

The relationship between Wattage (heat) output and the applied Voltage of electric resistance heating elements is determined by a precise physical rule defined as Ohm's Law which states that the current in a resistance heating element is directly proportional to the applied Voltage. Ohm's Law is traditionally expressed as:

$$I = \frac{E}{R}$$

Where: I = Amperes (Current)
E = Voltage
R = Ohms (Resistance)

The same equation using the conventional abbreviation for voltage is:

$$I = \frac{V}{R}$$

Where: I = Amperes (Current)
V = Voltage
R = Ohms (Resistance)

An unknown electrical value can be derived by using any two known values in one of the variations of Ohm's Law shown at the right.

VOLTS

$\text{VOLTS} = \sqrt{\text{WATTS X OHMS}}$

$\text{VOLTS} = \frac{\text{WATTS}}{\text{AMPERES}}$

VOLTS = AMPERES X OHMS

OHMS

$\text{OHMS} = \frac{\text{VOLTS}}{\text{AMPERES}}$

$\text{OHMS} = \frac{\text{WATTS}}{\text{AMPERES}^2}$

$\text{OHMS} = \frac{\text{VOLTS}^2}{\text{WATTS}}$

OHM'S LAW

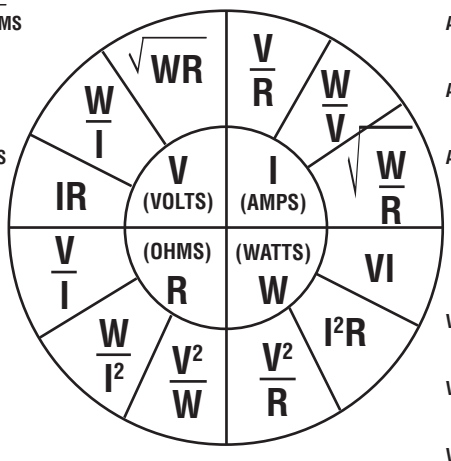

AMPERES

$\text{AMPERES} = \frac{\text{VOLTS}}{\text{OHMS}}$

$\text{AMPERES} = \frac{\text{WATTS}}{\text{VOLTS}}$

$\text{AMPERES} = \sqrt{\frac{\text{WATTS}}{\text{OHMS}}}$

WATTS

WATTS = VOLTS x AMPERES

WATTS = AMPERES² x OHMS

$\text{WATTS} = \frac{\text{VOLTS}^2}{\text{OHMS}}$

Voltage & Wattage Relationships

An electric resistance element only produces rated Wattage at rated Voltage. It is common for electric heating elements and assemblies to be connected to a wide range of operating Voltages. Since the Wattage output varies directly with the ratio of the square of the Voltages, the actual Wattage can be calculated for any applied Voltage. The relationship is expressed by the equation below,

$$W_A = W_R \times \left(\frac{V_A^2}{V_R^2}\right)$$

Where: W_A = Actual Wattage
W_R = Rated Wattage
V_A = Applied Voltage
V_R = Rated Voltage

Percent of Rated Wattage for Various Applied Voltages

Applied Voltage	Rated Voltage													
	110	115	120	208	220	230	240	277	380	415	440	460	480	575
110	100	91	84	28	25	23	21	16	8.4	7.0	6.2	5.7	5.2	3.7
115	109	100	92	31	27	25	23	17	9.0	7.6	6.7	6.2	5.7	4.0
120	119	109	100	33	30	27	25	19	10	8.4	7.4	6.8	6.3	4.3
208	—	—	300	100	89	82	75	56	30	25	22	20	19	13
220	—	—	—	112	100	91	84	63	34	28	25	23	21	15
230	—	—	—	122	109	100	92	69	37	31	27	25	23	16
240	—	—	—	133	119	109	100	75	40	33	30	27	25	17
277	—	—	—	—	—	—	133	100	53	45	40	36	33	23
380	—	—	—	—	—	—	—	188	100	84	74	68	63	44
415	—	—	—	—	—	—	—	—	119	100	89	81	75	52
440	—	—	—	—	—	—	—	—	—	112	100	91	84	58
460	—	—	—	—	—	—	—	—	—	123	109	100	92	64
480	—	—	—	—	—	—	—	—	—	—	119	109	100	70
550	—	—	—	—	—	—	—	—	—	—	156	143	131	91
575	—	—	—	—	—	—	—	—	—	—	171	156	144	100
600	—	—	—	—	—	—	—	—	—	—	186	170	156	109

Three Phase Equations (Balanced)

Ohm's Law, as stated above, applies to electrical resistance elements operated on single phase circuits. Ohm's Law can be modifed to calculate three phase values by adding a correction factor for the phase Voltage relationships. The three phase equations shown can be applied to any balanced Delta or Wye circuit. The terms used in the equations are identified below:

V_L = Line Voltage
V_P = Phase Voltage
I_L = Line Current (Amps)
I_P = Phase Current (Amps)
W_T = Total Watts
R_1 = R_2 = R_3 = Element Resistance
W_C = Wattage per Circuit (Equal Circuits)
R_C = Circuit Resistance in Ohms Measured Phase to Phase

3Ø Delta

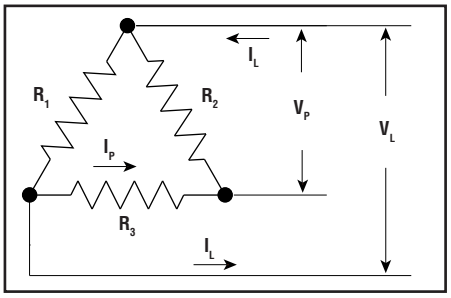

$V_P = V_L$ | $V_L = V_P$
$W_T = 1.73\ I_L \times V_L$ | $W_T = 3\ (V_L^2 \div R_1)$
$I_P = I_L \div 1.73$ | $I_L = I_P \times 1.73$
$W_C = 1.73\ I_L \times V_L \div \#$ Circuits
$R_C = (2 \times V_L^2) \div W_C$ | $R_C = V_L^2 \div 0.5 W_C$

Note — For Open Delta connections, see next page.

3Ø Wye

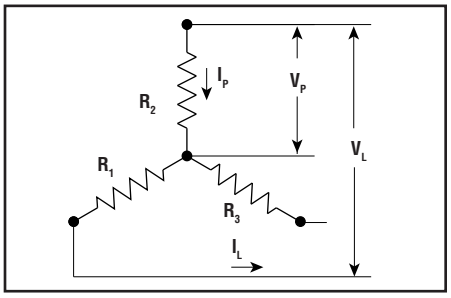

$V_P = V_L \div 1.73$ | $V_L = V_P \times 1.73$
$W_T = 1.73\ I_L \times V_L$ | $W_T = V_L^2 \div R_1$
$I_P = I_L$ | $I_L = I_P$
$W_C = 1.73\ I_L \times V_L \div \#$ Circuits
$R_C = (2 \times V_L^2) \div W_C$ | $R_C = V_L^2 \div 0.5\ W_C$

Note — For Open Wye connections, see next page.

Technical Information

Three Phase Equations & Heater Wiring Diagrams

Open Delta & Wye

Three phase heating circuits are most efficient when operated under balanced conditions. If it is necessary to operate an unbalanced load, the equations below can be used to calculate the circuit values for open three phase Delta or Wye circuits. The terms used in the equations are identified below:

V_L = Line Voltage
V_P = Phase (Element) Voltage
I_L = Line Current (Amps)
I_{LL} = Line Current (Unbalanced Phase)
I_P = Phase Current (Amps)
W_T = Total Watts
R_1 = R_2 = R_3 = Element Resistance
R_C = Circuit Resistance in Ohms Measured from Phase to Phase

3Ø Open Delta

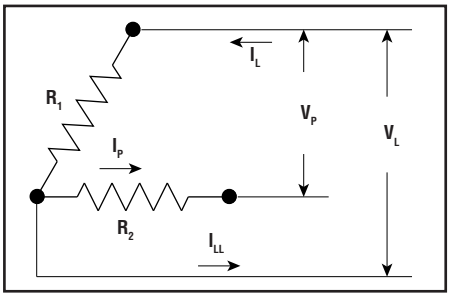

$V_P = V_L$ | $V_L = V_P$
$W_T = 2V_L \times I_L$ | $W_T = 2\,(V_L^2 \div R_1)$
$I_P = I_L$ | $I_L = I_P$
$W_C = 2V_P \times I_P$ | $I_{LL} = 1.73 \times I_P$

The loss of a phase or failure of an element in a three (3) element Delta circuit will reduce the wattage output by 33%.

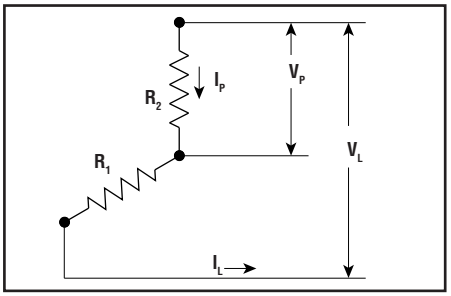

3Ø Open Wye

$V_P = V_L \div 2$ | $V_L = V_P \times 2$
$W_T = I_L \times V_L$ | $W_T = V_L^2 \div 2R_1$
$I_P = I_L$ | $I_L = I_P$
$R_C = V_L^2 \div W_C$

The loss of a phase or failure of an element in a three (3) element Wye circuit will reduce the wattage output by 50%. Heating elements are basically in series on single phase power.

Typical Heater Wiring Diagrams

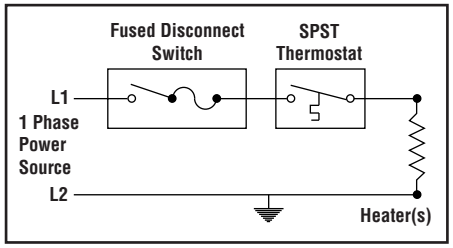

Single Phase 120 VAC heater circuit where line voltage and current do not exceed thermostat rating.

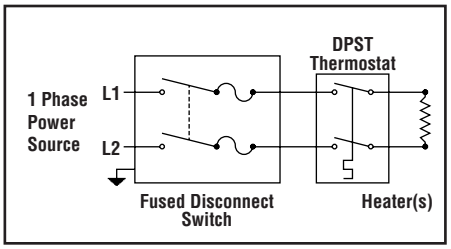

Single Phase AC circuits where line voltage and current do not exceed thermostat rating.

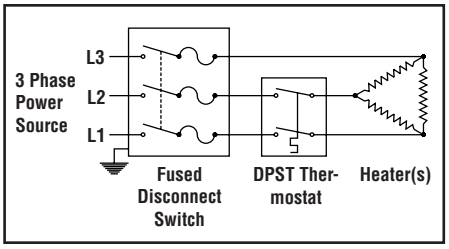

Three Phase AC heater circuit where line voltage and current do not exceed thermostat rating. Circuit does not have a "positive" off.

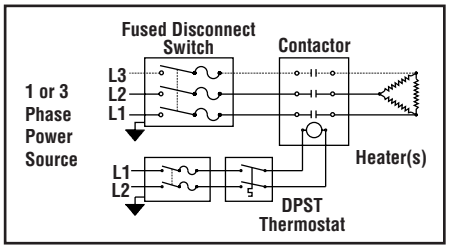

Single or Three Phase AC heater circuit where line voltage and current exceed thermostat rating. Separate control circuit can use a single pole or double pole thermostat. Control circuit requires over-current protection.

WARNING — Hazard of Electric Shock. Any installation involving electric heaters must be effectively grounded in accordance with the National Electrical Code to eliminate shock hazard.

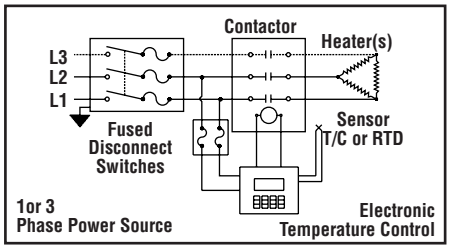

Single or Three Phase AC heater circuit using electronic temperature controllers and contactors. Controller and contactor holding coil must be rated for the same voltage as the heater circuit. Control circuit requires over- current protection.

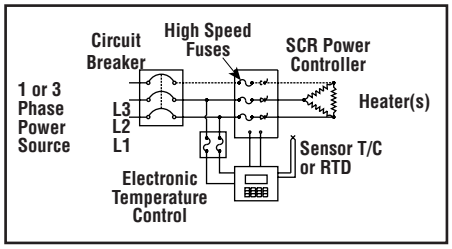

Single or Three Phase AC heater circuit using an electronic temperature controller and a SCR (solid state) power controller. Controller must be rated the same voltage as the heater circuit. Control circuit requires over-current protection. All electrical wiring to electric heaters must be installed in accordance with the National Electrical Code or local electrical codes by a qualified person.

Wiring & Ambient Temperatures

Ambient temperatures must be considered when selecting wiring materials for electric heater circuits. Heating equipment and processes may cause associated wiring to operate well above ambient temperatures. These temperatures may result from heat conducted from the heater terminals, radiation from heated surfaces or simply high ambient air temperatures. Nickel plated copper or nickel alloy conductors with high temperature insulation should always be used in high temperature areas. Outside these areas, conventional wiring materials can usually be used. 60°C building wire is usually not suitable unless otherwise indicated.

Wiring in Severe Conditions

Moist or wet locations require gasketed terminal and junction boxes to protect equipment and wiring. Rigid conduit is recommended. Hazardous Locations require the use of approved explosion-proof terminal and junction boxes. Rigid conduit or mineral insulated (MI) cable is mandatory in Division 1 areas. Some Hazardous Locations may require conduit seals (EYS) adjacent to the equipment.

Technical Information

Wiring Practices for Electric Heaters

Wire Insulation & Conductors

The selection of wiring materials to be used in a particular application depends upon the service Voltage and the anticipated operating temperatures. The table below lists some of the more common code wire constructions according to their temperature limitations. Insulated wires should be derated for elevated ambient temperatures and should never be used above their temperature rating. The operating temperature of unplated copper wire should be limited to 200°C (392°F) maximum. A complete listing of wire construction and allowable current carrying capacities is shown in the National Electric Code Article 310.

General Purpose Wiring

Max. Conductor Temperature °C	°F	Wire Type (600V)	Construction (Copper Conductors)
60	140	TW	Thermoplastic
75	167	RHW	Rubber
		THW	Thermoplastic
90	194	RHH	Heat Resistant Rubber
		THWN	Heat Resistant Thermoplastic
		XHHN	Heat Resistant Cross-link Thermoplastic
		MTW	Heat Resistant Cross-link Thermoplastic
200	392	FEP	Teflon®

High Temperature Wiring Materials

Max. Conductor Temperature °C	°F	Wire Type (600V)	Construction (Nickel Plated Copper or Nickel Conductors)
250	482	TGT	Teflon® - Glass - Teflon®
		TGGT	
450	842	MGS	Mica - Glass - Silicone
		MGT	Mica - Glass - Teflon®
594	1100	Bare	Maganese Nickel Wire or Bus Bars with Ceramic Insulators

Note — High temperature wiring materials are available for field application.

Contactor Sizing

Contactors are normally rated for inductive and resistive loads. Most electric resistance heaters have negligible inrush or inductive current. Select contactors based on resistive load ratings. Using the formulas shown in the paragraphs on wire sizing to determine the amp load per pole (phase). Select a contactor with the next highest current rating. Use a two pole contactor for single phase (two-wire) power and a three pole contactor for balanced Delta or Wye three phase loads. For heater loads with high inrush current, refer to product data information for maximum amperage.

Thermocouple Wire & Cable

Thermocouples and extension lead wires are color coded to aid in identification and to avoid inadvertent cross wiring. The following charts indicate the colors used of different alloys.

Thermocouple Color Coding

Type	Positive Color (+)	Alloys
J	White	Iron/Constantan
K	Yellow	Chromel/Alumel
T	Blue	Copper/Constantan
E	Purple	Chromel/Constantan
R	Black	Platinum/Platinum (with 13% Rhodium)
S	Black	Platinum/Platinum (with 6% Rhodium)
N	Orange	Nicrosil/Nisil

Note — Negative (-) conductor identified with red colored insulation.

Thermocouple Extension Wire Colors

Type	Positive	Negative	Color Overall	Positive Color (+)
T	TPX	TNX	Blue	Blue
J	JPX	JNX	Black	White
E	EPX	ENX	Purple	Purple
K	KPX	KNX	Yellow	Yellow
R or S	SPX	SNX	Green	Black
B	BPX	BNX	Gray	Gray

Note — Negative (-) conductor identified with red colored insulation.

Electrical Noise & Controls

Electrical "noise" refers to extraneous electrical voltages that interfere with legitimate control signals. Most electrical noise is introduced by electromagnetic coupling with fluorescent lights, contactors, power wiring, switches and other arcing devices. Shield control circuit wiring and keep thermocouple wires separate from power wiring. Trace shielded thermocouple lead wires in a separate conduit for maximum protection.

Temperature Limits for Controls

Most mechanical controls and thermostats (control bodies) can withstand a wide range of ambient temperatures ranging from below freezing to over 140°F. Electronic controls, transformers, contactors and other electrical devices are more temperature sensitive and extreme temperatures will usually shorten the life of the component. Most electrical and electronic equipment will function accurately in ambient temperatures ranging from about 30°F to about 130°F. Triacs and SCR controls frequently require special cooling for full load ratings when operated over 120°F. Refer to the installation instructions or contact the device manufacturer for recommendations.

Wiring Hints for Electric Heaters

The following are some general recommendations for wiring electric heating elements and assemblies. These recommendations are only suggestions and are not intended to conflict with the National Electric Code or local codes.

WARNING — Hazard of Electric Shock. Any installation involving electric heaters must be effectively grounded in accordance with the National Electrical Code to eliminate shock hazard. All electrical wiring to electric heaters must be installed in accordance with the National Electrical code or local electrical codes by a qualified person.

1. Repetitive heating and cooling can cause wiring connections to loosen over time. High amperage through a loose terminal can cause overheating and terminal failure. All heater terminal connections should be tightened to a maximum torque consistent with terminal strength. Use a second wrench or pliers to prevent twisting heater terminals.
2. Use stranded wire in applications where the power wires to heater terminal connections may be subject to movement. When using solid wire or bus bar on heater terminals, provide expansion loops between points of support to minimize damaging stresses due to expansion and contraction.
3. Solder or silver braze lead connections to heating elements that may be subject to extreme temperatures or vibration. Use a minimum of flux to complete the connection and keep flux from contaminating the heating element. Remove residual flux to prevent corrosion of the electrical joint.
4. Keep thermostat capillary tubing and thermocouple wiring clear of heater terminals to prevent accidental short circuits. Sleeving or insulated tubing is recommended.
5. Use wiring suitable for the anticipated operating temperatures. Unless the heater is specifically marked for use with low temperature copper wiring, high temperature alloy conductors are recommended for connections to the heater terminals.
6. Do not use rubber, wax impregnated or plastic covered wire inside terminal enclosures of heaters in high temperature applications. These insulations will deteriorate and give off fumes which can contaminate the heating elements and cause short circuits.

Technical Information

Wiring Practices for Electric Heaters *(cont'd.)*

Selecting Wire Size (AWG)

The size (wire gauge) of the electrical conductor for a particular application will depend upon the Amperage (current) which the heating load will draw from the power source. Current can be calculated by Ohm's Law. To calculate amperage, use the following formulas. On a single phase (two-wire) power supply, the amperage per line is calculated by:

$$\text{1 Ph Amperage} = \frac{\text{Total Circuit Wattage}}{\text{Line Voltage}}$$

On three phase power circuits with balanced Delta or Wye heating loads, line amperage is calculated by:

$$\text{3 Ph Amperage} = \frac{\text{Total Circuit Wattage}}{\text{Line Voltage x 1.73}}$$

Table II lists amperages for common kW ratings.

Allowable Ampacities

Once the load current has been determined, wire size for the calculated amperage may be selected from tables in Article 310 of the National Electrical Code (NEC). As a guide, Table III at the right lists recommended ampacities for the more common insulated wires for high temperature applications. Current ratings for 90°C wire in a 30°C ambient are included for reference.

Corrections for Elevated Ambient Temperatures

The recommended current carrying capacities of 200°C and 250°C wire are valid if conductor temperatures do not exceed 104°F (40°C). Operating temperatures in excess of 104°F (40°C) require the application of a temperature correction factor for the corresponding wire.

Example — Size 14 AWG, type TGT wire is capable of handling 39 Amperes at 104°F (40°C) but must be reduced to 0.85 (85%) or 33 Amperes when operated at 212°F (100°C).

Multiple Insulated Wires in Conduit

The wire size selected above may be used in the heating circuit with three (3) wires enclosed in rigid or flexible conduit to protect the wiring. If more than 3 conductors are installed in the same conduit, another current correction factor must be used. For 4 to 6 conductors in a single conduit use 80% of the recommended current-carrying capacity. For 7 to 24 conductors use 70%.

Table II — Amperage (Current) for Typical kW Heater Ratings

	Single Phase					Three Phase Balanced Load				
kW	120V	208V	240V	440V	480V	208V	240V	440V	480V	575V
1	8.4	4.8	4.2	2.3	2.1	2.8	2.5	1.4	1.3	1.0
2	16.7	9.7	8.4	4.6	4.2	5.6	4.9	2.7	2.5	2.0
3	25.0	14.5	12.5	6.9	6.3	8.4	7.3	4	3.7	3.0
4	33.4	19.3	16.7	9.1	8.4	11.2	9.7	5.3	4.9	4.0
5	41.7	24.1	20.9	11.4	10.5	13.9	12.1	6.6	6.1	5.0
6	50.0	28.9	25.0	13.7	12.5	16.7	14.5	7.9	7.3	6.0
7.5	62.5	36.1	31.3	17.1	15.7	20.9	18.1	9.9	9.1	7.5
10	83.4	48.1	41.7	22.8	20.9	27.8	24.1	13.2	12.1	10.0
12	100.0	57.7	50.0	27.3	25	33.4	29	15.8	14.5	12.1
15	125.0	72.2	62.5	34.1	31.2	41.7	36.2	19.7	18.1	45.1
20	167.0	96.2	83.4	45.5	41.7	55.6	48.2	26.3	24.1	20.1
25	209.0	121	105	56.9	52.1	69.5	60.3	32.9	30.1	25.1
30	—	145	125	68.2	62.5	83.4	72.3	39.4	36.2	30.2
50	—	241	209	114	105	139	121	65.7	60.3	50.3
75	—	—	313	171	157	209	181	98.6	90.4	75.4
100	—	—	417	228	209	278	241	132	121.0	100.0

Table III — Allowable Ampacities

Three Insulated Conductors in a Raceway or Conduit				Single Conductor[1,2] in Free Air (200°C Ambient)		
Conductor Type	Copper	Copper	Nickel or Nickel Coated Copper	Nickel Coated Copper	Nickel	
Insulation Type	THHN XHHW MTW	FEP PFA SRG	TGT TGGT TFE	MGT MGS	MGT MGS	
Ambient Temp.	30°C (86°F)	40°C (104°F)	40°C (104°F)	200°C (392°F)	200°C (392°F)	
Maximum Conductor Temperature (Insulation Limits)						
Size AWG	90°C (194°F)	200°C (392°F)	250°C (482°F)	450°C (842°F)	450°C (842°F)	
14	25	36	39	44	23	
12	30	45	54	58	31	
10	40	60	73	77	42	
8	55	83	93	100	53	
6	75	110	117	—	—	
Correction Factors for Elevated Ambient Temperatures						
Ambient (°C)	For ambient temperature exceeding the values in the above table, multiply the allowable ampacities by the appropriate factor below.					Ambient (°F)
36 - 40	0.91	1.00	1.00	—	—	96 - 104
41 - 45	0.87	0.97	0.98	—	—	105 - 113
46 - 50	0.82	0.96	0.97	—	—	114 - 122
51 - 55	0.76	0.95	0.95	—	—	123 - 131
56 - 60	0.71	0.94	0.94	—	—	132 - 140
61 - 70	0.58	0.9	0.93	—	—	141 - 158
71 - 80	0.41	0.87	0.9	—	—	159 - 176
81 - 90	—	0.83	0.87	—	—	177 - 194
91 - 100	—	0.79	0.85	1.22	—	195 - 212
101 - 120	—	0.71	0.79	1.19	—	213 - 248
121 - 140	—	0.61	0.72	1.16	1.16	249 - 284
141 - 160	—	0.5	0.65	1.12	1.12	285 - 320
161 - 180	—	0.35	0.58	1.06	1.06	321 - 356
181 - 200	—	—	0.49	1.00	1.00	357 - 392
201 - 225	—	—	0.35	0.92	0.92	393 - 437
226 - 250	—	—	—	0.87	0.87	438 - 542
250 - 300	—	—	—	0.70	0.70	543 - 572
300 - 350	—	—	—	0.49	0.49	573 - 662

1. Data derived or extrapolated from values and criteria set forth in NEC Article 310.
2. MGT & MGS insulated wire is intended to be used for interconnection of strip heaters and elements located in high temperature ambients and is not intended for general purpose wiring. Do not use these Amp ratings for three insulated conductors inside raceways or conduits.

Reference Data

Pressure-Temperature Ratings of Common Flange Materials

Recommended Maximum Pressure-Temperature Ratings[1] for Catalog Flange Immersion & Circulation Heaters[2]

	Class 150 (Pressures in psig)							Class 300 (Pressures in psig)							Class 600 (Pressures in psig)							
	B-16.5 Material Group Number																					
	1.1	1.9	2.1	2.2	2.3	2.4	2.5	1.1	1.9	2.1	2.2	2.3	2.4	2.5	1.1	1.9	2.1	2.2	2.3	2.4	2.5	
	Carbon Steel	Alloy Steel 1-¼ Cr-½ Mo	Austenitic Steels Type 304	Type 316	Type 304L 316L	Type 321	Type 347, 348	Carbon Steel	Alloy Steel 1-¼ Cr-½ Mo	Austenitic Steels Type 304	Type 316	Type 304L 316L	Type 321	Type 347, 348	Carbon Steel	Alloy Steel 1-¼ Cr-½ Mo	Austenitic Steels Type 304	Type 316	Type 304L 316L	Type 321	Type 347, 348	Temp (°F)
-20 to 100	285	290	275	275	230	275	275	740	750	720	720	600	720	720	1,480	1,500	1,440	144	1,200	1,440	1,440	-20 to 100
200	260	260	235	240	195	235	245	675	710	600	620	505	610	635	1,350	1,425	1,200	124	1,015	1,220	1,270	200
300	230	230	205	215	175	210	225	655	675	530	560	455	545	590	1,315	1,345	1,055	112	910	1,090	1,175	300
400	200	200	180	195	160	190	200	635	660	470	515	415	495	555	1,270	1,315	940	103	825	990	1,110	400
500	170	170	170	170	145	170	170	600	640	435	480	380	460	520	1,200	1,285	875	955	765	915	1,035	500
600	140	140	140	140	140	140	140	550	605	415	450	360	435	490	1,095	1,210	830	905	720	875	985	600
650	125	125	125	125	125	125	125	535	590	410	445	350	430	480	1,075	1,175	815	890	700	855	960	650
700	110	110	110	110	110	110	110	535	570	405	430	345	420	470	1,065	1,135	805	865	685	840	935	700
750	95	95	95	95	95	95	95	505	530	400	425	335	415	460	1,010	1,065	795	845	670	830	920	750
800	80	80	80	80	80	80	80	410	510	395	415	330	415	455	825	1,015	790	830	660	825	910	800
850	65	65	65	65	65	65	65	270	485	390	405	320	410	445	535	975	780	810	645	815	890	850
900	50	50	50	50	—	50	50	170	450	385	395	—	405	430	345	900	770	790	—	810	865	900
950	35	35	35	35	—	35	35	105	380	375	385	—	385	385	205	755	750	775	—	775	775	950
1000	20	20	20	20	—	20	20	50	225	325	365	—	355	365	105	445	645	725	—	715	725	1000
1050								Notes	140	310	360	—	345	360	—	275	620	720	—	695	720	1050
1100								A, B	95	260	325	—	300	325	—	190	515	645	—	605	645	1100
1150								C	50	195	275	—	235	275	—	105	390	550	—	475	550	1150
1200								D	35	155	205	—	180	170	—	70	310	410	—	365	345	1200
1250								—	—	—	—	—	—	125	—	—	220	365	—	280	245	1250
1300								—	—	85	140	—	105	95	—	—	165	275	—	210	185	1300
1350								E, F	—	60	105	—	80	70	—	—	125	205	—	165	135	1350
1400								G	—	50	75	—	60	50	—	—	90	150	—	125	105	1400
1450								H	—	35	60	—	50	40	—	—	70	115	—	95	80	1450
1500								—	—	25	40	—	40	35	—	—	50	85	—	75	70	1500

Material Groups

1.1	A-105, A516-70
1.1	A350-LF2
1.9	A182-F11, A182-F12
2.1	A182-F304, F304H and A240-304
2.2	A182-F316, F316H and A240-316
2.3	A182-F304L, F316L and A240-304L
2.4	A182-F321, F321H and A240-321, 321H
2.5	A182-F347, F347H and A240-347, 347H

1. The above table is in accordance with ANSI B16.5, 1988 Edition. For other materials, critical applications or for higher pressure-temperature requirements, refer to ANSI Std. B16.5 or contact your Local Chromalox Sales office.
2. Pressure-temperature ratings for ASME pressure vessels and flanges may vary from the values shown in the above table due to Code requirements, re-inforcement and ligament calculations. Contact your Local Chromalox Sales office for further information and specific recommendations for ASME Coded flanges and heaters.

Other Notes —

A. Not recommended for prolonged use above 800°F.
B. Do not use A105 flanges above 1000°F or A516-70 plate over 850°F.
C. Do not use A350-LF2 flanges above 650°F.
D. Not recommended for prolonged use above 1100°F.
E. Do not use A182-F304L flanges or A240-304L plate above 800°F.
F. Do not use A182-F316L flanges or A240-316L plate above 850°F.
G. Do not use A182-F321 flanges or A240-321 over 1000°F.
H. Do not use A182-F347 flanges or A240-347 plate above 1000°F.

Pipe Specifications — Standard (Schedule 40) Steel & Stainless Pipe

Nominal Pipe Size	Pipe Schedule	Outside Dia. (In.)	Wall Thickness (In.)	Inside Dia. (In.)	Inside Area (In²)	Weight (Lbs/Ft.)	Volume (Gal/Ft.)	Wt. Water (Lbs/Ft.)	Thds/In. (NPT)
1/8	Sch 40 (Std)	0.405	0.068	0.269	0.0568	0.245	0.0030	0.0246	27
1/4	Sch 40 (Std)	0.540	0.088	0.364	0.1041	0.425	0.0054	0.0451	18
3/8	Sch 40 (Std)	0.675	0.091	0.493	0.191	0.568	0.0099	0.0827	18
1/2	Sch 40 (Std)	0.840	0.109	0.622	0.304	0.851	0.0157	0.1316	14
3/4	Sch 40 (Std)	1.050	0.113	0.824	0.533	1.131	0.0277	0.2301	14
1	Sch 40 (Std)	1.315	0.133	1.049	0.864	1.679	0.0449	0.374	11-1/2
1-1/4	Sch 40 (Std)	1.660	0.140	1.380	1.496	2.273	0.0779	0.648	11-1/2
1/1-2	Sch 40 (Std)	1.900	0.145	1.610	2.036	2.718	0.106	0.882	11-1/2
2	Sch 40 (Std)	2.375	0.154	2.067	3.360	3.653	0.174	1.455	11-1/2
2-1/2	Sch 40 (Std)	2.875	0.203	2.469	4.079	5.793	0.249	2.076	8
3	Sch 40 (Std)	3.500	0.216	3.068	7.039	7.578	0.384	3.20	8
3-1/2	Sch 40 (Std)	4.000	0.226	3.548	9.89	9.11	0.514	4.28	8
4	Sch 40 (Std)	4.500	0.237	4.026	12.73	10.79	0.661	5.51	8
5	Sch 40 (Std)	5.563	0.258	5.047	20.01	14.62	1.04	8.66	8
6	Sch 40 (Std)	6.625	0.280	6.065	28.89	18.97	1.50	12.51	8
8	Sch 40 (Std)	8.625	0.322	7.981	50.00	28.55	2.66	21.69	8
10	Sch 40 (Std)	10.75	0.365	10.02	78.90	40.48	4.19	34.10	8
12	Standard	12.75	0.375	12.00	113.10	49.56	5.96	49.00	8
14	Standard	14.00	0.375	13.25	137.90	54.57	7.19	59.70	8

Reference Data

Physical & Thermodynamic Properties of Common Liquids

Substance	Density[1] (Lbs/Ft³)	Specific Heat (Btu/lb/°F)	Thermal Conductivity (Btu/in/hr/ft²/°F)	Melting Point (°F)	Latent Heat of Fusion (Btu/lb)	Boiling Point (°F)	Latent Heat of Vaporization (Btu/lb)	Viscosity Centipoise
Acetic Acid	65.5	0.522	1.19	62	84	245	174.2	1.222
Acetone	49.42	0.514	1.22	-140	42.1	133	224	0.31
Allyl Alcohol	53.31	0.665	1.25	-200	—	206	294.1	1.363
Ammonia	43.5	1.099	3.48	107	142.9	-28	583	—
Amyl Alcohol	51.06	0.65	1.13	-110	—	280	216.3	—
Aniline	63.77	0.512	1.2	21	48.8	364	186.6	4.467
Bromine	194.7	0.107	—	19	28.5	138	79.4	1.005
Butyl Alcohol	50.54	0.563	1.07	-130	54	244	254	2.948
Butyric Acid	60.2	0.515	1.13	20	54.1	326	217	1.54
Carbolic Acid (Phenol)	66.7	0.561	—	106	52.3	360	—	12.74
Carbon Disulfide	78.9	0.24	1.12	-169	—	115	148.8	0.376
Carbon Tetrachloride	99.47	0.201	0.744	-9	12.8	170	83.5	0.975
Caustic Soda (50% Solution)	95.4	0.78	—	—	—	—	—	—
Decane	45.6	0.5	1.03	-21	86.9	345	—	0.77
Di-ethyl Ether	44.61	0.541	—	-177	42.4	94	151	0.245
Ether	46	0.503	0.97	—	—	95	160	—
Ethyl Acetate	52.3	0.468	1.21	-116	—	171	183.8	0.45
Ethyl Alcohol	49.27	0.68	1.26	-174	46.4	173	367.5	1.2
Ethyl Bromide	90.5	0.215	—	-182	—	101	107.8	0.402
Ethyl Chloride	56.05	0.368	2.15	-214	—	54	165.9	—
Ethyl Iodide	120.8	0.161	2.57	-163	—	162	82	0.592
Ethylene Glycol	69.2	0.555	1	—	—	388	344	—
Ethylene Bromide	136.5	0.173	—	50	—	269	99.2	1.721
Ethylene Chloride	71.75	0.294	—	-35	—	183	139.2	0.838
Formic Acid	76.13	0.526	1.25	47	118.9	213	216	1.784
Glycerin	78.69	0.576	1.36	68	85.5	554	—	830
Heat Transfer Fluids								
Dowtherm A	66.1	0.377	—	54	42.2	494	127	—
Dowtherm G	65.4	0.377	—	40	42.2	551	123	—
Mobiltherm 603	53.7	0.592	—	—	—	—	—	—
Therminol VP-1	65.9	0.377	—	—	—	495	130.6	—
Heptane	42.68	0.532	0.89	-132	—	210	137.3	0.416
Hexane	41.18	0.6	0.86	-40	—	155	142.5	0.326
Linseed Oil	58.28	0.44	—	-4	—	548	—	33.1
Methyl Acetate	57.84	0.468	1.12	-144	—	134	176.6	0.388
Methyl Alcohol	49.42	0.601	1.49	-144	42.7	148	473	0.596
Methyl Iodide	142.58	—	—	-87	—	108	82.6	0.5
Nitric Acid (100%)	94.41	0.42	1.92	-42	71.5	187	270	—
Nitrobenzene	75.63	0.35	11.52	42	40.5	412	142.4	2.1
Octane	44.12	0.51	1	-70	—	258	131.7	0.542
Olive Oil	57.28	0.471	—	—	—	~ 572	—	84
Pentane	39.37	0.558	0.79	-202	—	97	153.6	0.24
Petroleum Products								
Asphalt	62.3	0.42	5.04	—	—	—	—	—
Benzene (Benzol)	54.85	0.412	1.02	42	54.2	176	169.4	0.654
Kerosene	49.9	0.5	1.03	—	—	—	—	—
Fuel Oil #6	58.5	0.41	0.85	—	—	—	—	—
Gasoline	41.2	0.5	0.936	—	—	128 - 164	—	—
Lube Oils	55.4	0.43	—	—	—	—	—	—
Naphthalene	71.4	0.4	—	176	64	411	136	4
Paraffin (Melted)	44.3	0.71	1.68	—	—	~ 525	—	—
Toluene	54.03	0.404	1.08	-139	—	231	155.7	0.59
Propionic Acid	61.77	0.473	1.2	-5	—	286	177.8	1.102
Propyl Alcohol	50.16	0.57	—	-197	—	208	296	2.256
Soy Bean Oil	57.35	~ 0.28	—	—	—	—	—	40.6
Sulfur (Melted)	14.6	0.234	—	—	—	833	—	—
Sulfuric Acid (100%)	114.25	0.344	—	51	43.3	638	219.7	50
Tallow (Lard)	58.66	0.64	—	50 - 106	—	—	—	17.6
Turpentine	54.48	0.42	0.876	14	—	319	123.5	1.487
Water	**62.4**	**1**	**4.17**	**32**	**143.6**	**212**	**972**	**1.005**
Xylene (Ortho)	55	0.411	1.08	-13	—	291	149.2	0.881

1. Where the temperature is not given, room temperature of 68°F (20°C) is understood.

Other Notes —

A. Dowtherm is a trademark of the Dow Chemical Company.
B. Mobiltherm is a trademark of the Mobil Oil Corporation.
C. Therminol is a trademark of the Monsanto Company.

Reference Data

Physical & Thermodynamic Properties of Common Solids

Properties of Metals (Solid)

Substance	Density (Lb/Ft³)	Specific Heat (Btu/lb/°F)	Thermal Conductivity (Btu/in/hr/ft²/°F)	Melting Point (°F)	Latent Heat Fusion (Btu/lb)
Aluminum	169	0.226	1536	1220	167.4
Antimony	413	0.0504	127	1167	70.2
Babbitt - Tin	462	0.071	278	465	279
Barium	218	0.068	—	1562	—
Beryllium	113	0.425	960	2462	572.4
Bismuth	610	0.0294	62	520	22.5
Brass (Yellow)	529	0.092	768	~ 1680	—
Cadmium	540	0.0552	644	609	23
Calcium	97	0.168	910	1490	140
Carbon	165	0.165	165	> 6400	—
Chromium	432	0.111	480	2940	126
Cobalt	544	0.1001	336	2696	115.2
Copper	555	0.0928	2784	1981	88.7
Gold	1204	0.0312	2352	1945	28.6
INCOLOY® 800	495	0.108	80	2475	—
INCONEL® 600	525	0.106	103	2470	—
Iridium	1399	0.0323	448	4449	47
Iron (99.97%)	491	0.1075	498	2795	117
Lead	708	0.0306	243	621	10.8
Lithium	33	0.79	516	357	217
Magnesium	108	0.246	1188	1204	126
Manganese	449	0.1211	81	2300	116
Mercury	845	0.0333	58	-38	4.98
Molybdenum	636	0.065	948	4748	126
MONEL® 400	551	0.11	144	2370	—
Nickel	552	0.1032	432	2624	131.4
Platinum	1333	0.0319	492	3224	48.4
Potassium	54	0.177	720	146	26.3
Rhodium	776	0.058	666	3570	—
Silver	665	0.0557	2904	1761	46.6
Sodium	60	0.283	970	208	48.6
Solder 50%Sn - 50%Pb	550	0.04	340	~ 440	17
Steel, Carbon	487	0.12	315	2548	—
Steel, SS	501	0.12	113	2550	—
Tantalum	1035	0.036	384	5162	—
Tin	454	0.0548	432	449	25.9
Titanium	281	0.1125	108	3272	—
Type Metal 85%Pb - 15%Sb	625	0.04	180	~ 479	14
Tungsten	1204	0.032	1104	6119	79
Uranium	397	0.028	168	< 3362	—
Vanadium	349	0.1153	240	3110	—
Zinc	445	0.0931	780	787	47.9
Zirconium	408	0.066	132	3452	108

Note — Where temperature is not given, 68°F (20°C) temperature is understood.

Properties of Metals (Liquid)

Metal	Melting Point (°F)	Latent Ht. of Fusion (Btu/lb)	Liquid Temp. (°F)	Density (Lbs/ft³)	Specific Heat (Btu/Lb/°F)	Thermal Conductivity (Btu/in/hr/ft²/°F)
Aluminum	1220	173	1220	148.6	0.26	—
	—	—	1292	147.7	0.26	717
	—	—	1454	—	0.26	842
Bismuth	520	21.6	600	625	0.034	114
	—	—	1000	608	0.037	108
	—	—	1400	591	0.039	108
Cadmium	609	23.8	626	500	0.063	—
	—	—	660	499	0.063	308
	—	—	752	495	0.063	—
Gold	1945	26.9	2012	1,076	0.036	—
Lead	621	10.6	700	658	0.038	126
	—	—	900	650	0.037	137
	—	—	1300	633	—	—
Lithium	357	284	392	31.7	1	262
	—	—	752	31	1	—
Magnesium	1204	148	1204	98	0.317	—
	—	—	1328	94	—	—
	—	—	1341	—	0.321	—
Mercury	-38	5	50	847	0.033	56
	—	—	300	826	0.033	80
	—	—	600	802	0.032	97
Potassium	146	26.3	300	50.4	0.190	312
	—	—	800	46.3	0.183	274
	—	—	1300	42.1	0.180	229
Silver	1761	44.8	1761	581	0.069	—
	—	—	1832	578	0.069	—
	—	—	2000	574	0.069	—
Sodium	208	48.7	200	58	0.33	598
	—	—	400	56	0.32	557
	—	—	700	54	0.31	502
	—	—	1300	49	0.30	414
Solder 50%Sn - 50%	421	17	—	—	0.056	—
60%Sn - 40%	375	28	—	—	0.058	—
Tin	449	26.1	482	—	0.058	—
	—	—	768	427	—	—
	—	—	783	—	—	229
Zinc	787	43.9	787	432	0.12	—
	—	—	932	—	—	400
	—	—	1112	425	0.117	394

Reference Data

Physical & Thermodynamic Properties of Common Solids *(cont'd.)*

Properties of Non-Metallic Solids

Substance	Density (Lbs/Ft³)	Specific Heat (Btu/lb/°F 20°C 68°F)	Thermal Conductivity (Btu/in/hr/ft²/°F)	Melting Point (°F)
Alumina	231	0.19	205	—
Aluminum Silicate (Lava)	130	0.25	9	—
Asbestos (Insul.)	36	0.2	1.1	—
Asbestos - Cement Board	120	0.24	4	—
Asphalt	81	0.4	5.2	250
Bakelite	81	0.35	116	—
Basalt	184	0.2	—	—
Beeswax	60	—	—	144
Boron Nitride (Comp.)	130	0.32	150	—
Brick, Building	123	0.22	4.8	—
Carbon, Powder	131	0.168	2.4	6400
Graphite, Solid	140	0.165	1044	—
Graphite, Powder	130	0.165	1.27	—
Diamond	219	0.16	15840	—
Cellulose (Pulp)	3.4	0.35	0.32	—
Chalk	143	0.215	5.76	—
Charcoal (Oak)	33	0.2	0.36	—
Clay	115	0.22	9	—
Coal (Anthracite)	97	0.3	1.18	—
Coke	75	0.36	6.6	—
Concrete, Sand	144	0.22	12.6	—
Concrete, Cinder	97	0.21	4.92	—
Cordierite	138	0.35	23	—
Cork (Granulated)	5.4	0.485	0.336	—
Earth (42% H_2O)	108	0.9	7.44	—
Earth (Dry, Packed)	95	0.42	0.9	—
Earth (Dry, Stony)	127	0.44	3.6	—
Fiberglas® (Insul.)	0.75	—	0.29	—
Fiberglas® (Insul.)	3	—	0.22	—
Firebrick (Clay)	112	0.198	6.96	—
Fosterite	174	0.23	26	—
Fused Silica (Quartz)	137	0.31	9.96	—
Glass				
Normal	139	0.199	7.08	2200
Crown	154	0.161	7.08	—
Flint (Leaded)	200	0.117	9.48	—
Pyrex	139	0.20	7.08	—
Granite	159	0.192	13 - 28	—
Ice -0°C (32°F)	57.5	0.465	15.6	32
Limestone	153	0.217	6.48	—

Properties of Non-Metallic Solids

Substance	Density (Lbs/Ft³)	Specific Heat (Btu/lb/°F 20°C 68°F)	Thermal Conductivity (Btu/in/hr/ft²/°F)	Melting Point (°F)
Magnesia 85% (Insul.)	12	0.222	4.2	—
Magnesium Oxide	135	0.25	17.6	—
Marble	170	0.21	18	—
Mica	165	0.206	3	—
Paper	58	0.32	0.9	—
Plastics				
ABS	62.2	0.3 - 0.4	1.56	—
Cellulose Acetate	82.9	0.3 - 0.42	2.28	—
Epoxy (Resin)	71.8	0.4 - 0.5	1.2 - 3.5	—
Fluoroplastic (PTFE)	133	0.25	1.68	—
Nylon	69.1	0.4	1.2	—
Phenolic	82.9	0.35	0.097 - 0.3	—
Polyethylene	57	0.55	2.28	—
Polystyrene	64.8	0.32	0.7 - 1.08	—
Polystyrene (Exp.)	1.7	0.29	0.252	—
Polypropylene	56.7	0.45	1.21 - 1.36	—
Polyurethane (Exp.)	1.5	0.38	0.228	—
Polyvinyl	86.4	0.2 - 0.3	0.84 - 1.20	—
Paraffin	56	0.69	1.68	133
Porcelain	145	0.26	15.6	—
Pyroceram	163	0.233	23.4	—
Quartz	138	0.17	27.6	3150
Rigid Insulation				
Fiber Board	14.8		0.28	
Inorganic Bonded	10 - 15		0.45	
Rock Salt	136	0.21	—	1472
Rubber Soft	68.6	0.48	0.96	—
Rubber, Hard	74.3	0.48	1.104	—
Sand	94	0.195	2.25	—
Silicon	145	0.181	—	2577
Sodium Carbonate	135	0.30	—	1546
Sodium Chloride	135	0.22	—	1440
Sodium Cyanide	94	0.3	—	1015
Sodium Nitrate	141	0.29	—	555
Sodium Nitrite	135	0.3	—	490
Steatite	158	0.2	23.2	—
Sugar	105	0.3	—	160
Sulfur	129	0.181	1.8	—
Woods (Average)	23 - 70	0.45 - 0.67	0.78 - 1.78	—
Oak, Red	42	0.57	1.188	—
Pine, White	25	0.67	0.72	—

Reference Data

Equivalents & Conversions

Temperature Equivalents (°F and °C)

°C	°F	°C	°F	°C	°F	°C	°F	°C	°F	°C	°F	°C	°F	°C	°F
-50	-58	95	203	240	464	385	725	530	986	675	1247	820	1508	965	1769
-45	-49	100	212	245	473	390	734	535	995	680	1256	825	1517	970	1778
-40	-40	105	221	250	482	395	743	540	1004	685	1265	830	1526	975	1787
-35	-31	110	230	255	491	400	752	545	1013	690	1274	835	1535	980	1796
-30	-22	115	239	260	500	405	761	550	1022	695	1283	840	1544	985	1805
-25	-13	120	248	265	509	410	770	555	1031	700	1292	845	1553	990	1814
-20	-4	125	257	270	518	415	779	560	1040	705	1301	850	1562	995	1823
-15	-5	130	266	275	527	420	788	565	1049	710	1310	855	1571	1000	1832
-10	14	135	275	280	536	425	797	570	1058	715	1319	860	1580	1005	1841
-5	23	140	284	285	545	430	806	575	1067	720	1328	865	1589	1010	1850
0	32	145	293	290	554	435	815	580	1076	725	1337	870	1598	1015	1859
5	41	150	302	295	563	440	824	585	1085	730	1346	875	1607	1020	1868
10	50	155	311	300	572	445	833	590	1094	735	1355	880	1616	1025	1877
15	59	160	320	305	581	450	842	595	1103	740	1364	885	1625	1030	1886
20	68	165	329	310	590	455	851	600	1112	745	1373	890	1634	1035	1895
25	77	170	338	315	599	460	860	605	1121	750	1382	895	1643	1040	1904
30	86	175	347	320	608	465	869	610	1130	755	1391	900	1652	1045	1913
35	95	180	356	325	617	470	878	615	1139	760	1400	905	1661	1050	1922
40	104	185	365	330	626	475	887	620	1148	765	1409	910	1670	1055	1931
45	113	190	374	335	635	480	896	625	1157	770	1418	915	1679	1060	1940
50	122	195	383	340	644	485	905	630	1166	775	1427	920	1688	1065	1949
55	131	200	392	345	653	490	914	635	1175	780	1436	925	1697	1070	1958
60	140	205	401	350	662	495	923	640	1184	785	1445	930	1706	1075	1967
65	149	210	410	355	671	500	932	645	1193	790	1454	935	1715	1080	1976
70	158	215	419	360	680	505	941	650	1202	795	1463	940	1724	1085	1985
75	167	220	428	365	689	510	950	655	1211	800	1472	945	1733	1090	1994
80	176	225	437	370	698	515	959	660	1220	805	1481	950	1742	1095	2003
85	185	230	446	375	707	520	968	665	1229	810	1490	955	1751	1100	2012
90	194	235	455	380	716	525	977	670	1238	815	1499	960	1760	1105	2021

Values for Interpolation in Above Table

1°C = 1.8°F	6°C = 10.8°F	1°F = 0.55°C	6°F = 3.33°C
2°C = 3.6°F	7°C = 12.6°F	2°F = 1.11°C	7°F = 3.88°C
3°C = 5.4°F	8°C = 14.4°F	3°F = 1.66°C	8°F = 4.44°C
4°C = 7.2°F	9°C = 16.2°F	4°F = 2.22°C	9°F = 5°C
5°C = 9°F		5°F = 2.77°C	

Note — All decimals are exact. All decimals are repeating decimals.

Formula for Converting Temperature Scales

Fahrenheit to Celsius	°F = 1.8°C + 32
Celsius to Fahrenheit	°C = 5/9 x (°F - 32)
Fahrenheit to Rankine (absolute)	°R = °F + 460
Celsius to Kelvin (absolute)	°K = °C + 273

Pressure Equivalents

Unit	Lbs/In²	Kg/cm²	Atm	Bar	Pascals	mm Hg. (0°C)	In. Hg (32°F)	Ft H_2O (60°F)
1 lbs/in²	1	0.0703	0.06804	0.06895	6,895	51.715	2.036	2.3086
1 kg/cm.²	14.22	1	0.9678	0.98066	98,066	735.56	28.96	32.843
1 Atmosphere (atm)	14.696	1.0333	1	1.01325	101,326	760	29.921	33.925
1 Bar	14.504	1.019716	0.9869	1	1×10^5	750.06	29.53	33.49
1 Pascal (N/m²)	14.5×10^{-5}	1.03×10^{-5}	1×10^{-5}	1×10^{-5}	1	7.5×10^5	0.000295	0.000335
1 mm Hg. (0°C)	0.01934	1.35951	0.1316	0.1333	13,330	1	0.03937	0.04465
1 in. Hg. (32°F)	0.4912	0.034532	0.03342	0.03386	3,386	25.4	1	1.1342
1 ft. H_2O (60°F)	0.4331	0.03045	0.02947	0.02986	2,987	22.396	0.88175	1
100 ft H_2O (60°F)	43.31	3.0448	2.9469	2.9859	298,700	2239.6	88.175	100

Notes —

A. 1 inch of Hg (Mercury) = 13.6 inches of water.

B. 1 pound per square inch (psi) = 2.31 feet of water.

C. 1 foot of water = 0.4331 pounds per square inch (psi).

Reference Data

Engineering Constants & Conversions

Common Conversion Factors

To Convert	Units	Multiply By	To Obtain	Units
Atmospheres	atm	1.0133	Bar	
Atmospheres	atm	29.92	Inches Mercury	in. Hg
Bar		0.9869	Atmospheres	atm
Bar		14.504	Pounds/square inch	psi
British thermal unit	Btu	1,055	Joules	J
British thermal unit	Btu	0.0002931	Kilowatts	kW
British thermal unit	Btu	0.2931	Watts	W
British thermal unit	Btu	0.252	Kilocalories	kcal
Brit. ther. units/hr	Btuh	0.2931	Joules/second	J/s
Brit. ther. units/hr	Btuh	0.2931	Watt/hours	Wh
Brit. ther. units/hr	Btuh	0.0002931	Kilowatt/hours	kWh
Brit. ther. units/ inch/hour/sqft/°F	Btu/in/h/ ft²/°F	0.1442	Watts/meter/°C	W/m/°C
Brit. ther. units/hr	Btuh	0.252	Kilocalories/hour	kcal/h
Calories	cal	4.187	Joules	J
Centimeter	cm	0.03281	Feet	ft
Centimeter	cm	0.3937	Inches	in.
Centimeters/second	cm/s	1.969	Feet/minute	fpm
Cubic centimeter	cm^3	0.061	Cubic inches	in^3
Cubic feet	ft^3	62.43	Pounds of water	lb
Cubic feet	ft^3	28.32	Cubic centimeters	cm^3
Cubic feet	ft^3	0.02832	Cubic meters	m^3
Cubic feet	ft^3	7.481	Gallons, U.S.	gal
Cubic feet	ft^3	28.32	Liters	l
Cubic feet/minute	cfm	1.699	Cubic meters/hour	m^3/h
Cubic feet/minute	term	0.000472	Cubic meters/sec	m^3/s
Cubic feet/minute	cfm	0.4719	Liters/second	l/s
Cubic inch	in^3	16.39	Cubic centimeters	cm^3
Cubic meter	m^3	35.32	Cubic feet	ft^3
Cubic meter	m^3	264.2	Gallons, U.S.	gal
Cubic meter	m^3	1,000	Liters	l
Cubic meters/hr	m^3/h	0.5885	Cubic feet/min.	cfm
Cubic meters/hr	m^3/h	4.403	Gallons/min.	gpm
Cubic meters/sec	m^3/s	2,119	Cubic feet/min.	cfm
Feet	ft	30.48	Centimeters	cm
Feet	ft	0.3048	Meters	m
Feet/minute	fpm	0.508	Centimeters/sec.	cm/s
Feet/minute	fpm	0.00508	Meters/sec.	m/s
Gallon, Imperial		1.201	Gallons, U.S.	gal
Gallon, U.S.	gal	231	Cubic inches	in^3
Gallon, U.S.	gal	0.1337	Cubic feet	ft^3
Gallon, U.S.	gal	8.337	Pounds of water	lb
Gallon, U.S.	gal	0.8327	Gallon Imperial	
Gallon, U.S.	gal	3.785	Liters	l
Gallon, U.S.	gal	0.003785	Cubic meters	m^3
Gallons/minute	gpm	0.2271	Cubic meters/hr	m^3/h
Gallons/minute	gpm	0.06309	Liters/sec.	l/s
Grams	g	0.035274	Ounces	oz
Grams	g	0.002205	Pounds	lb
Grams/cu centimeter	g/cm^3	1,000	Kilograms/cu meter	kg/m^3
Grams/cu centimeter	g/cm^3	62.43	Pounds/cubic foot	lb/ft^3
Grams/cu centimeter	g/cm^3	0.03613	Pounds/cubic inch	lb/in^3
Horsepower	hp	0.7457	Kilowatts	kW
Horsepower	hp	2,545	British thermal units	Btu
Horsepower	hp	33,000	Foot-lbs/min	ft-lb/min
Horsepower, boiler	bhp	9.803	Kilowatts	kW
Horsepower, boiler	bhp	3,352	British ther. units/hr	Btuh
Inches	in.	2.54	Centimeters	cm
Inches	in.	25.4	Millimeters	mm
Inches Mercury	in. Hg	0.03342	Atmospheres	atm
Inches Mercury	in. Hg	0.03937	Torr	

Common Conversion Factors

To Convert	Units	Multiply By	To Obtain	Units
Joules	J	0.000948	British thermal unit	Btu
Joules	J	0.2388	Calories	cal
Joules	J	0.0002778	Watt/hrs	Wh
Joules/second	J/s	1	Watts	W
Kilocalories/hour	kcal/h	3.969	British ther. units/hr	Btuh
Kilograms	kg	2.205	Pounds	lb
Kilo./cubic meter	kg/m^3	0.001	Grams/cu centimeter	g/cm^3
Kilo./cubic meter	kg/m^3	0.06243	Pounds/cubic foot	lb/ft^3
Kilograms/sq cm	kg/cm^2	14.22	Pounds/square inch	psi
Kilojoule	kJ	0.2778	Watt/hrs	Wh
Kilometers/hour	km/h	0.6315	Miles/hr	mph
Kilopascal	kPa	0.145	Pounds/square inch	psi
Kilowatt/hours	kWh	3,412	British ther. units/hr	Btuh
Kilowatt	kW	3,412	British thermal units	Btu
Liter	l	0.03532	Cubic feet	ft^3
Liter	l	0.001	Cubic meters	m^3
Liter	l	0.2642	Gallon, U.S.	gal
Liters/second	l/s	2.119	Cubic feet/min.	cfm
Liters/second	l/s	15.85	Gallons/min.	gpm
Meter	m	3.281	Feet	ft
Meter	m	39.37	Inches	in.
Meters/second	m/s	196.9	Feet/min.	fpm
Miles/hour	mph	1.609	Kilometers/hr	km/h
Milliliter	ml	1	Cubic centimeters	cm^3
Millimeter	mm	0.03937	Inches	in.
Newtons/sq meter	N/m^2	0.000145	Pounds/square inch	psi
Ounce	oz	28.35	Grams	g
Pound	lb	453.6	Grams	g
Pound	lb	0.4536	Kilograms	kg
Pounds/cubic foot	lb/ft^3	0.01602	Grams/cu centimeter	g/cm^3
Pounds/cubic foot	lb/ft^3	16.02	Kilograms/cu meter	kg/m^3
Pounds/cubic inch	lb/in^3	27.68	Grams/cu centimeter	g/cm^3
Pounds/square inch	psi	0.06805	Atmospheres	atm
Pounds/square inch	psi	0.06895	Bar	
Pounds/square inch	psi	0.07031	Kilograms/sq cm	kg/cm^2
Pounds/square inch	psi	6.895	Kilopascals	kPa
Pounds/square inch	psi	6.895	Newtons/sq meter	N/m^2
Pounds/square inch	psi	51.71	Torr	
Square centimeters	cm^2	0.001076	Square feet	ft^2
Square centimeters	cm^2	0.155	Square inches	in^2
Square feet	ft^2	929	Square centimeters	cm^2
Square feet	ft^2	0.0929	Square meters	m^2
Square inches	in^2	6.452	Square centimeters	cm^2
Square meters	m^2	10.76	Square feet	ft^2
Torr		0.001316	Atmospheres	atm
Torr		25.4	Inches Mercury	in. Hg
Watt-hours	Wh	3,600	Joules	J
Watt-hours	Wh	3.412	British ther. units/hr	Btuh
Watt-hours	Wh	3.6	Kilojoules	kJ
Watt-hours	Wh	0.001	Kilowatt-hours	kWh
Watts	W	1	Joules/second	J/s
Watts	W	3.412	British thermal units	Btu
Watts	W	0.001	Kilowatts	kW
Watts/meter/°C	W/m/°C	6.934	British ther. units/Btu/in./hr inch/hour/sqft/°F	/ft²/°F
Watts/sq centimeter	W/cm^2	6.452	Watts/square inch	W/in^2
Watts/square inch	W/in^2	0.155	Watts/sq centimeter	W/cm^2
Yards	yd	0.944	Meters	m

Technical Information

NEMA Enclosures & Chromalox Equivalents

NEMA Enclosures for Non-Hazardous Areas

The National Electrical Manufacturer's Association (NEMA) publishes a classification system for electrical enclosures. The NEMA classification or type indicates the exposure or environment for which the enclosure was designed. While Chromalox E1, E2, E3 and E4 enclosures are designed for applications similar to the NEMA types, they are not identical due to modifications required to adapt the housings to heater configurations. Condensed descriptions of the NEMA non- hazardous enclosure types are listed below with the Chromalox equivalents indicated. The condensed descriptions are not intended to be complete representations of the National Electrical Manufacturers Association standards for electrical enclosures. For complete details on NEMA enclosure requirements refer to NEMA Std. No. 250.

Type 1 Enclosures — are for indoor use in locations where unusual service conditions do not exist. Intended primarily to provide protection against contact with the enclosed equipment and limited amounts of falling dirt. **(Chromalox E1 or General Purpose enclosures.)**

Type 2 Enclosures — are for indoor use providing protection against limited amounts of falling water and dirt.

Type 3 Enclosures — are for outdoor use providing protection against windblown dust, rain, and sleet and damage from external ice formation on the enclosure.

Type 3R Enclosures — are similar to Type 3 except Type 3R provides protection against falling rain.

Type 3S Enclosures — are for outdoor use protecting against windblown dust, rain, and sleet and providing for operation of external mechanisms when ice laden.

Type 4 Enclosures — are for indoor or outdoor use providing protection against windblown dust and rain, splashing water, and hose-directed water and remain undamaged by the formation of ice on the enclosure. **(Chromalox E4 Moisture Resistant or E2 Moisture and Explosion Resistant enclosures.)**

Type 4X Enclosures — are similar to Type 4 except Type 4X also protects against corrosion.

Type 5 Enclosures — are for indoor use and protects against dust and falling dirt.

Type 6 Enclosures — are for indoor or outdoor use providing protection against the entry of water during temporary submersion at a limited depth and remain undamaged by ice on the enclosure.

Type 6P Enclosures — are similar to Type 6 except Type 6P protects against the entry of water during prolonged submersion at a limited depth.

Type 12 Enclosures — are intended for indoor use providing protection against dust, falling dirt and dripping non-corrosive liquids. **(Chromalox E2 and E4 enclosures.)**

Type 12K Enclosures (knockouts) — are similar to Type 12 except they are provided with knockouts. Knockouts only permitted in either or both the top or bottom walls.

Type 13 Enclosures — are for indoor use providing protection against lint, dust, spraying of water, oil and non-corrosive coolant. **(Chromalox E2 enclosures may be used.)**

The table below lists a comparison of the characteristics of NEMA and Chromalox enclosures for Non-Hazardous areas.

Note — For Classified (Hazardous) Location enclosures, refer to NEMA Enclosures and Hazardous Location Heaters elsewhere in this section.

Comparison of Specific Applications of Enclosures for Non-Hazardous Locations

Provides a Degree of Protection Against the following Environmental Conditions	Type of Enclosure														Chromalox®			
	1	2	3	3R	3S	4	4X	5	6	6P	11	12	12K	13	E1	E2	E3	E4
Incidental contact with the enclosed equipment	X	X	X	X	X	X	X	X	X	X	X	X	X	X	X	X	X	X
Falling dirt	X	X				X	X	X	X	X	X	X	X	X	X	X	X	X
Falling liquids and light splashing		X				X	X		X	X	X	X	X	X		X	X	X
Dust, lint, fibers and flyings — Not Class III						X	X	X	X	X		X	X	X		X	X	X
Hosedown and splashing water						X	X		X	X						X		X
Oil and coolant seepage												X	X	X		X	X	X
Oil or coolant spraying and splashing														X		X		
Windblown dust			X		X	X	X		X	X						X	X	X
Rain, snow and sleet			X	X	X	X	X		X	X						X		
Sleet					X													
Corrosive agents							X			X	X							
Occasional temporary submersion									X	X								
Occasional prolonged submersion										X								

Technical Information

NEMA Enclosures & Hazardous Location Heaters

NEMA Enclosures for Classified Locations (Hazardous)

The following are condensed descriptions of the NEMA enclosure types for Classified (Hazardous) Locations. The Chromalox enclosures equivalent to the NEMA description are indicated. The Chromalox enclosure may not be indentical to the NEMA description due to modifications required to adapt the housing to heater configurations. The NEMA enclosure descriptions are not intended to be complete representations of the National Electrical Manufacturers Association standards for electrical enclosures. For complete details on NEMA enclosure requirements, refer to NEMA Std. No. 250.

Type 7 Enclosures — are intended for indoor use in locations classified as Class I, Groups A, B, C and D as defined in the National Electrical Code. **(Chromalox E2, E3 or Explosion Resistant enclosures.)**[2]

Type 8 Enclosures — are intended for indoor or outdoor use in locations classified as Class I, Groups A, B, C and D as defined in the National Electrical Code. **(Chromalox E2 enclosures.)**[2]

Type 9 Enclosures — are intended for indoor use in locations classified as Class II, Groups E, F and G as defined in the National Electrical Code. **(Chromalox E2, E3 or Explosion Resistant enclosures.)**

Type 10 Enclosures (MSHA) shall be capable of meeting the requirements of the Mine Safety and Health Administration, 30 C.F.R., Part 18.

Chromalox Enclosures for Electric Heaters in Classified Locations

Chromalox has terminal enclosures specifically designed for use on electric heaters installed in Classified (Hazardous) areas. These enclosures are identified as Type E2 and E3. Typical flange heaters with E2 hazardous area terminal enclosures are shown below.

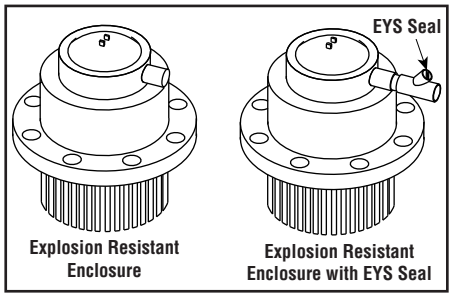

E2 enclosures are supplied with gaskets and are suitable for both indoor and outdoor locations. E2 enclosures meet the moisture and explosion-resistant requirements for NEMA 4, 12, 7, 8 and 9 applications. E3 enclosures are usually not furnished with gaskets and are intended primarily for indoor and dry locations. See table below.

Electric Heaters for Hazardous Locations

Chromalox provides a wide variety of electric immersion and air heaters for use in hazardous locations. These heaters are listed by Underwriters Laboratories (UL) or certified by Canadian Standards Association (CSA). Heaters designed and certified for Class I or II Division I hazardous locations can be used in Division 2 areas in the same class.

Immersion Heaters — Screw plug and flanged immersion heaters are available with terminal enclosures CSA or CSA NRTL/C certified for Class I, Groups B, C and D and Class II Groups E, F and G. Supplemental low-liquid level controls are required for maximum safety and equipment protection when immersion heaters are used in hazardous locations.[2]

NRTL /C

Circulation Heaters — Many water and oil circulation heaters are available with terminal enclosures CSA or CSA NRTL/C certified Class I, Groups B, C and D and Class II, Groups E, F and G. Supplemental controls are required for maximum safety and equipment protection when circulation heaters are used in hazardous locations

Air Heaters — Blower type air heaters (CXH-A) are available for Class I, Division I, Groups C and D and Class II, Division I, Groups E, F and G with UL, UL-C, and/or CSA certification. Convection type air heaters (CVEP) are available for use in Class I, Division I, Groups B, C and D hazardous locations. Convection type air heaters (FPEP and CEP) are available for use in Class I, Division I, Groups C and D and Class II, Division I Groups E, F and G.

Specialty Products & Components —Chromalox has designed, manufactured and provided certification on a large number of specialty products for hazardous areas and other special applications. These products include UL Recognized Components (finned tubular elements), duct heaters and special aircraft ground support equipment. Contact your Local Chromalox Sales office for assistance in designing equipment or solving any unique electric heating application for hazardous areas.

Comparison of Specific Applications of Enclosures for Indoor Hazardous Locations

Atmospheres Containing	Class	Group	NEMA 7	NEMA 8	NEMA 9	NEMA 10	Chromalox® E2	Chromalox® E3
Acetylene	I	A	X	X				
Hydrogen, Manufactured Gas	I	B	X	X			X[1,2]	X[1,2]
Diethel Ether, Ethylene, Cyclopropane	I	C	X	X			X	X
Gasoline, Hexane, Butane, Naptha, Propane, Acetone Toluene or Isoprene	I	D	X	X			X	X
Metal Dust	II	E			X		X	X
Carbon Black, Coal Dust, Coke Dust	II	F			X		X	X
Flour, Starch, Grain Dust	II	G			X		X	X
Fibers, Flyings	III	G			X		X	X
Methane with or without Coal Dust	MSHA					X		

1. Requires seals in the conduit adjacent to the terminal enclosure.
2. For EMT and MT styles, Class 1 Group B; Divisions 1& 2, consult factory.

Technical Information

Hazardous Locations & Electric Heater Applications

Hazardous Locations (NEC)[5]

Articles 500 to 504 in the National Electrical Code (NEC) define the requirements for electrical and electronic equipment and wiring in locations where fire or explosion hazards may exist. In Article 500, hazardous locations are categorized by class. Classes are defined as follows:

Class I — Groups A, B, C & D - Division 1 or 2 Temperature Rating T1 - T6

Class II — Groups E, F & G - Division 1 or 2 Temperature Rating T1 - T6

Class III — Division 1 or 2

Class I, II & III (NEC 500)

Hazardous location classes are identified based on the explosive material present. The following information is an interpretation and summary of each class and a discussion of some of the conditions to be considered when using electric heaters in these areas. Refer to the National Electrical Code and local authorities for the proper classification and requirements of a specific hazardous location.

Class I Locations (Gases) are areas where flammable gases or vapors are or may be present in the air in quantities sufficient to produce explosive or ignitable mixtures (NEC 500-5).

Class II Locations (Dust) are areas where the presence of combustible dust presents a fire or explosion hazard (NEC 500-6).

Class III Locations (Fibers) are areas made hazardous because of the presence of easily ignitable fibers or flyings, but in which such fibers or flyings are not likely to be in suspension in the air in quantities sufficient to produce ignitable mixtures (NEC 500-7).

Group Classification, Class I & II[6]

Certain chemicals create higher explosive pressures and more heat than others when ignited. In Class I and II hazardous locations, chemical families are further classified by Groups. Group classification involves determination of the maximum explosion pressures, the maximum safe clearance or gap between clamped enclosure joints and the minimum ignition temperature of the atmospheric mixture for a particular chemical.

NEC requires that any electrical equipment approved for use in a hazardous location must be approved for the class and for the specific group (gas or dust) that will be present. Groups are identified as A, B, C, D, E, F and G and are explained as follows:

Class I — Gases[6] (NEC 500-3a)

Combustible and flammable gases and vapors in Class I are sub-divided into four groups A, B, C and D. Group A gases create the most explosive pressure and therefore are the most difficult to contain. Group B is next, then Group C with Group D being the lowest. Third party listings of electrical equipment for Group A or B are more difficult to obtain than Group C or D. Individual gases are further defined by ignition temperature (see Temperature Ratings).

Group A —

Gases include:	Ignition Temperature °C	Ignition Temperature °F
Acetylene	305	581

Group B —

Gases include:	Ignition Temperature °C	Ignition Temperature °F
Butadiene[1]	420	788
Ethylene oxide[2]	429	804
Hydrogen & mfg gases > 30% hydrogen (by volume)	400	752
Propylene oxide[3]	449	840

Group C —

Gases include:	Ignition Temperature °C	Ignition Temperature °F
Acetaldehyde	175	347
Cyclopropane	500	932
Diethyl ether	160	320
Ethylene	450	842
Dimethyl hydrazine	249	480

Group D — is the largest group and includes many of the common petroleum products.

Gases include:	Ignition Temperature °C	Ignition Temperature °F
Acetone	465	869
Alcohol's		
1-butanol (butyl)	365	689
Amyl alcohol	300	572
Butyl alcohol (ter)	480	896
Ethanol (ethyl)	356	689
Isobutyl alcohol	427	800
Isopropyl alcohol	399	750
Methanol (methyl)	385	725
Propyl alcohol	440	824
Ammonia[3]	651	1204
Benzene	560	1040
Butane	405	761
Ethane	515	959
Ethyl acetate	427	800
Ethylene dichloride	413	775
Gasoline		
(56 - 60 octane)	280	536
(100 octane)	456	853
Heptanes	280	536
Hexanes	225	437
Isobutyl acetate	421	790
Isoprene	220	428
Methane (Nat. gas)	482/632	900/1170
Methyl ethyl ketone	516	960
Petroleum naphtha[4]	288	550
Octanes	220	428
Pentanes	260	500
Propane	450	842
Vinyl acetate	427	800
Vinyl chloride	472	882
Xylenes	530	986

Notes —

1. **Group D** equipment may be used for this atmosphere if isolated in accordance with Section 501-5(a) by sealing all conduit(s) 1/2 inch or larger (within 18 inches of the enclosure).
2. **Group C** equipment may be used for this atmosphere if isolated in accordance with Section 501-5(a) by sealing all conduit(s) 1/2 inch or larger (within 18 inches of the enclosure).
3. **For Classification of Ammonia Atmospheres** see Safety Code for Mechanical Refrigeration (ANSI/ASHRAE 15-1992) and Safety Requirements for the Storage and Handling of Anhydrous Ammonia (ANSI/CGA G2.1-1989).
4. **Also Known By** the synonyms benzine, ligroin, petroleum ether or naphtha.
5. **NEC and National Electrical Code** are registered trademarks of the National Fire Protection Association.
6. **For a Complete List** defining properties of flammable liquids, gases, solids or dusts, refer to the latest edition of **NFPA 325, NFPA 497 or NFPA 499.**

Technical Information

Hazardous Locations & Electric Heater Applications *(cont'd.)*

Class II — Dust[1] (NEC 500-3b)

Groups E, F and G (Class II) — Combustible dusts are divided into Groups E, F and G. Classification involves investigation and testing of the assembled enclosure including the clamped joints, clearances and shaft openings. The blanketing effect of layers of dust, the electrical conductivity and the ignition temperature of the dust are also evaluated.

Group E Atmospheres contain metal dust, including aluminum, magnesium, their commercial alloys and other metals of similarly hazardous characteristics having resistivity less than 10^5 Ohm-cm.

Group F Atmospheres contain combustible carbonaceous dusts, charcoal, coal or other atmospheres containing these dusts sensitized by other hazardous materials and having resistivity greater than 10^2 through 10^8 Ohm-cm.

Group G Atmospheres contain combustible dusts such as flour, grain, wood and chemicals having resistivity of 10^5 Ohm-cm, or greater.

Class III — Fibers (NEC 500-7a)[1]

Atmospheres containing easily ignitable fibers such as rayon, cotton, flax, jute, hemp, kapok, excelsior and similar materials.

Divisions in Hazardous Locations

The NEC further sub-divides hazardous locations into Divisions (Div. 1 and 2). The requirements for Division 2 are less stringent than for Division 1. The two divisions are discussed in the following paragraphs.

Division I Locations

Class I, Division 1 — NEC 500-5(a) is an area where the hazard can exist under normal operating conditions. Included are areas where flammable or combustible liquids are transferred from one container to another, open vats, paint spray booths or any location where ignitable mixtures are used. Also included are locations where a hazard is caused by frequent maintenance, repair or equipment failure.

Class II, Division 1 — NEC 500-6(a) is an area where combustible dust is normally in the air in sufficient quantities to produce ignitable mixtures or where mechanical failure or abnormal equipment operation might produce ignitable mixtures. Locations also include operations where hazards exist because of frequent mechanical failure of machinery or equipment and where electrically conductive combustible dusts (all Group E and some Group F) are present in hazardous quantities.

Class III, Division 1 — NEC 500-7(a) is an area where easily ignitable fibers or materials producing combustible flyings are handled, manufactured or used.

Division 2 Locations

Class I, Division 2 — NEC 500-5(b) is an area where ignitable gases or vapors are handled, processed or used, but which are normally in closed containers or closed systems from which they can only escape through accidental rupture or breakdown of such containers or systems.

Class II, Division 2 — NEC 500-6(b) is an area where combustible dust is not normally in the air in sufficient quantities to produce ignitable mixtures or interfere with the operation of electrical equipment, or where dust is present as a result of infrequent malfunctioning of processing or handling equipment. Included are situations where combustible dust accumulations may interfere with the safe dissipation of heat from electrical equipment. No electrically conductive dusts as defined in NEC 502-1, (last sentence) are included in Class II, Div. 2 atmospheres.

Note — There is no Division 2 classification for Class II, Group E.

Class III, Division 2 — NEC 500-7(b) is an area where easily ignitable fibers are stored or handled.

Class I — Adjacent Divisions

In most indoor areas with adequate partitions, Div. 1 and 2 are self-contained areas. With partitions, a Div. 1 area may exist adjacent to a non-hazardous area. However, outdoors or in large indoor areas with few or no partitions, Class I, Div. 1 and Class 1, Div. 2 areas usually exist adjacent to each other. The Div. 1 location being near the point of vapor release and Division 2 is at a given distance fromthe release point of the flammable liquid. Where the spread of flammable vapors and gases is not contained by adequate partitions, the area designated as Class I, Div. 2 serves as a "transition zone" between the hazardous and non-hazardous area. Div. 1 is the hazardous area where flammable gases or vapors are released from the liquid. Div. 2 is the area further away from the point of release, where the gases or vapors are not normally of sufficient concentration to produce an ignitable mixture.

Class I & II — Temperature Ratings

Originally, equipment in each group had one maximum temperature rating. The maximum for Groups A, B and D was 280°C (536°F) and Group C was 180°C (356°F). Recognizing that chemicals and gases have different ignition temperatures, NEC revised the temperature ratings accordingly. Heat producing equipment must now be identified by Class, Group, Division and "T" rating. The "T" rating shall not exceed the ignition temperature of the specific gas, vapor or dust present. Values for "T" ratings for Class I and II equipment are shown in the table below:

T-Ratings for Class I and II

Maximum Degrees (°C)	Temperature Degrees (°F)	Identification "T" Number
450	842	T1
300	572	T2
280	536	T2A
260	500	T2B
230	446	T2C
215	419	T2D
200	392	T3
180	356	T3A
165	329	T3B
160	320	T3C
135	275	T4
120	248	T4A
100	212	T5
85	185	T6

Note 1 — For a complete list defining properties of flammable liquids, gases, solids or dusts, refer to the latest edition of NFPA 325, NFPA 497 or NFPA 499.

Technical Information

Hazardous Locations & Electric Heater Applications *(cont'd.)*

CENELEC (& IEC) Zone Classification System
Introduced to North America in 1996, the European CENELEC (and IEC) system of classification of hazardous locations is also permitted to apply to installations in the U.S. and Canada as an alternative in Class I Locations, and is now part of the NEC (Article 505) and CE Code (Section 18).

Class I, Zone 0 - A location in which explosive gas atmospheres are present continuously or for long periods of time.

Class I, Zone 1 - A location in which explosive gas atmospheres are likely to exist in normal operation or may exist frequently because of repairs, maintenance operations, and leakage or where equipment breakdowns could release gases or vapors and also cause simultaneous failure of electrical equipment in a mode to cause the electrical equipment to become a source of ignition.

Class I, Zone 2 - A location in which explosive gas atmospheres are not likely to occur in normal operation and, if they do occur, will exist for a short time only; or where volatile flammable liquids, flammable gas, or flammable vapors are handled, processed, or used, but are normally confined within closed containers or systems from which they can escape only as a result of accidental rupture or breakdown of the containers or system, or as a result of abnormal operation of the equipment with which the liquids or gases are handled, processed, or used; or where ignitable concentrations of flammable gases or vapors are normally prevented by adequate ventilation, but which may occur as a result of failure or abnormal operation of the ventilation system.

Class I Groups
Group I - Atmospheres containing explosive gas in underground coal mines. Electrical apparatus that is intended for use in underground mines.

Group IIC - Atmospheres containing acetylene, hydrogen (H2), or gases of equivalent hazard.

Group IIB - Atmospheres containing acetaldehyde, ethylene, or gases or vapors of equivalent hazard.

Group IIA - Atmospheres containing acetone, ammonia, ethyl alcohol, gasoline, methane, propane, or gases or vapors of equivalent hazard. **Note:** There is potential for confusion between the NEC/CE and IEC gas classification systems since the Group letters are reversed and even combined. Care should also be taken to avoid confusing Group II and Class II, since both use Roman numerals. An unintended result of specifying the IEC gas groups, which combine the traditional Groups A and B into Group IIC, is that equipment approved for hydrogen (H2) would also have to be approved for acetylene. Since very little equipment is designed for acetylene, the wording as originally adopted severely limits the availability of equipment for hydrogen applications. As a result, NEC Section 505-7(d) now allows for equipment to be listed for a specific gas or vapor, specific mixtures of gases or vapors, or any specific combination of gases or vapors. One common example is equipment marked for "IIB + H2". At present, the NEC or CE Code does not recognize any CENELEC or IEC dust classifications.

Combustion Principles
Three basic conditions must be satisfied for a fire or explosion to occur. First, a flammable liquid, vapor or combustible dust must be present in sufficient quantity. Second, the flammable liquid, vapor or combustible dust must be mixed with air or oxygen in the proportions required to produce an explosive mixture. Finally, a source of energy must be applied to the explosive mixture.

In applying these principles, the quantity of the flammable liquid or vapor that may be liberated and its physical characteristics must be recognized. Vapors from flammable liquids also have a natural tendency to disperse into the atmosphere, and rapidly become diluted to concentrations below the lower explosion limit, particularly when there is natural or mechanical ventilation. In order to have an explosive gas atmosphere, the concentration of the gas or vapor must be above the Lower Explosive Limit (LEL) but below the Upper Explosive Limit (UEL). The possibility that the gas concentration may be above the upper explosion limit does not afford any degree of safety, as the concentration must first pass through the explosive range to reach the upper explosion limit.

Equipment Marking Requirements
Electrical equipment permitted for use in hazardous locations must be marked to show the Class, Division (or Zone under NEC Article 505 and CE Section 18), Group, and maximum surface operating temperature or temperature code referenced to a 40˚C (104˚F) ambient temperature (some exceptions apply). Note that the maximum external temperature of the equipment shall not exceed the minimum ignition temperature of the atmosphere that the equipment is located in.

Electrical equipment approved for operation at ambient temperatures exceeding 40˚C shall be marked with the maximum ambient temperature for which the equipment is approved, and the operating temperature or temperature range at that ambient temperature.

Equipment not marked to indicate a division, or marked "Division 1" or "Div. 1", is suitable for both Division 1 and 2 locations. Equipment marked "Division 2" or "Div. 2" is suitable for Division 2 locations only. Equipment that is listed for a Zone 0 location shall be permitted in a Zone 1 or Zone 2 location of the same gas or vapor. Equipment that is listed for a Zone 1 location shall be permitted in a Zone 2 location of the same gas or vapor.

Explosion-Proof Enclosures

Maximum Surface Temperature Codes

Maximum Surface Temperature ˚C (˚F)	Identification Number NEC/CE T-Code	IEC T-Code
450˚ C (842˚F)	T1	T1
300˚ C (572˚F)	T2	T2
280˚ C (536˚F)	T2A	
260˚ C (500˚F)	T2B	
230˚ C (446˚F)	T2C	
215˚ C (419˚F)	T2D	
200˚ C (392˚F)	T3	T3
180˚ C (356˚F)	T3A	
165˚ C (329˚F)	T3B	
160˚ C (320˚F)	T3C	
135˚ C (275˚F)	T4	T4
120˚ C (248˚F)	T4A	
100˚ C (212˚F)	T5	T5
85˚ C (185˚F)	T6	T6

An enclosure which will withstand an internal explosion of a gas or vapor without rupture and without causing the ignition of an external gas or vapor.

Explosion-proof enclosures are not water-proof. They are designed to contain and dissipate explosions but they are not water-proof.

To prevent the ignition of an external explosive atmosphere, the enclosure must not only be strong enough to withstand the internal explosion pressure, but all of the openings (e.g., cover joints, conduit or cable entries, operating shafts, etc.) must be tight enough to cool the hot burning gases before they can come into contact with the external atmosphere.

Terms of Sale

1. GENERAL - Chromalox®, Inc. is herein referred to as the "Seller" and the customer or person or entity purchasing products ("Products") from Seller is referred to as the "Buyer." These Terms and Conditions, any price list or schedule, quotation, acknowledgment or invoice from Seller relevant to the sale constitute the complete and exclusive statement of the terms of the agreement governing the sale of Products by Seller to Buyer. Buyer's acceptance of the Products will manifest Buyer's assent to these terms and conditions. Seller reserves the right in its sole discretion to refuse orders.

2. PRICES AND TAXES - All prices are subject to change by Seller without notice. All prices specified herein are exclusive of any costs of any sales, use, value added, excise, gross receipts, business and occupation or similar present or future taxes imposed by any governmental body on the sale, delivery, use or other handling of the Products or in connection with any related or contemplated transactions.

3. EXCUSE OF PERFORMANCE - Seller shall not be responsible for non-performance or delays in performance due to acts of God; acts of Buyer; war; fire; flood; weather; sabotage; strikes or labor disputes; civil disturbances or riots; governmental requests, restrictions, allocations, laws, regulations, orders or actions; unavailability of or delays in transportation; default of suppliers; or unforeseen circumstances or any events or causes beyond Seller's reasonable control. Deliveries or other performance may be suspended for an appropriate period of time or canceled by Seller upon notice to Buyer in the event of any of the foregoing, but the balance of the agreement shall otherwise remain unaffected as a result of the foregoing.

If Seller determines that its ability to supply the total demand for the Products, or to obtain material used directly or indirectly in the manufacture of the Products, is hindered, limited or made impracticable due to causes set forth in the preceding paragraph, Seller may allocate its available supply of the Products or such material (without obligation to acquire other supplies of any such Products or material) among itself and its purchasers on such basis as Seller determines to be equitable without liability for any failure of performance which may result therefrom.

4. WARRANTY - Subject to the limitations of Section 5, Seller warrants that the Products manufactured by Seller will be free from defects in material and workmanship under normal use and regular service and maintenance for a period of one (1) year from the date of shipment of the Products by Seller, unless otherwise specified by Seller in writing. Products purchased by Seller from a third party for resale to Buyer shall carry only the warranty extended by the original manufacturer. **THIS IS THE SOLE AND EXCLUSIVE WARRANTY GIVEN BY SELLER WITH RESPECT TO THE PRODUCTS AND IS IN LIEU OF AND EXCLUDES ALL OTHER WARRANTIES, EXPRESS OR IMPLIED, ARISING BY OPERATION OF LAW OR OTHERWISE, INCLUDING WITHOUT LIMITATION, MERCHANTABILITY AND FITNESS FOR A PARTICULAR PURPOSE WHETHER OR NOT THE PURPOSE OR USE HAS BEEN DISCLOSED TO SELLER IN SPECIFICATIONS, DRAWINGS OR OTHERWISE, AND WHETHER OR NOT SELLER'S PRODUCTS ARE SPECIFICALLY DESIGNED AND/OR MANUFACTURED BY SELLER FOR BUYER'S USE OR PURPOSE.**

This warranty does not extend to any losses or damages due to misuse, accident, abuse, normal wear and tear, Buyer's negligence, unauthorized modification or alteration, use beyond rated capacity, or improper installation, maintenance or application. To the extent that Buyer or its agents has supplied specifications, information, representation of operating conditions or other data to Seller in the selection or design of the Products and the preparation of Seller's quotation, and in the event that actual operating conditions or other conditions differ from those represented by Buyer, any warranties or other provisions contained herein which are affected by such conditions shall be null and void.

If within thirty (30) days after Buyer's discovery of any warranty defects within the warranty period or within ten (10) days for quantity discrepancies, Buyer notifies Seller thereof in writing, Seller shall, at its option, repair, correct or replace F.O.B. point of manufacture, or refund the purchase price for that portion of the Products found by Seller to be defective or missing. Failure by Buyer to give such written notice within the applicable time period shall be deemed an absolute and unconditional waiver of Buyer's claim for such defects or shortages. Products repaired or replaced during the warranty period shall be covered by the foregoing warranty for the remainder of the warranty period or ninety (90) days from the date of shipment, whichever is longer.

Buyer assumes all other responsibility for any loss, damage, or injury to persons or property arising out of, connected with, or resulting from the use of Products, either alone or in combination with other products/components.

5. LIMITATION OF REMEDY AND LIABILITY - THE SOLE AND EXCLUSIVE REMEDY FOR BREACH OF ANY WARRANTY HEREUNDER (OTHER THAN THE WARRANTY PROVIDED UNDER SECTION 6) SHALL BE LIMITED TO REPAIR, CORRECTION OR REPLACEMENT, OR REFUND OF THE PURCHASE PRICE UNDER SECTION 6.

SELLER SHALL NOT BE LIABLE FOR DAMAGES CAUSED BY DELAY IN PERFORMANCE AND IN NO EVENT, REGARDLESS OF THE FORM OF THE CLAIM OR CAUSE OF ACTION (WHETHER BASED ON CONTRACT, INFRINGEMENT, NEGLIGENCE, STRICT LIABILITY, OTHER TORT OR OTHERWISE), SHALL SELLER'S LIABILITY TO BUYER AND/OR ITS CUSTOMERS EXCEED THE PRICE PAID BY BUYER FOR THE SPECIFIC PRODUCTS PROVIDED BY SELLER GIVING RISE TO THE CLAIM OR CAUSE OF ACTION. BUYER AGREES THAT IN NO EVENT SHALL SELLER'S LIABILITY TO BUYER AND/OR ITS CUSTOMERS EXTEND TO INCLUDE

INCIDENTAL, CONSEQUENTIAL OR PUNITIVE DAMAGES. The term "consequential damages" shall include, but not be limited to loss of anticipated profits, business interruption, loss of use or revenue, cost of capital or loss or damage to property or equipment.

6. PATENTS - Subject to the limitations of the second paragraph of Section 5, Seller warrants that the Products sold, except as are made specifically for Buyer according to Buyer's specifications, do not infringe any valid US patent or copyright in existence as of the date of shipment. This warranty is given upon the condition that Buyer promptly notify Seller of any claim or suit involving Buyer in which such infringement is alleged and cooperate fully with Seller and permit Seller to control completely the defense, settlement or compromise of any such allegation of infringement. Seller's warranty as to use patents only applies to infringement arising solely out of the inherent operation, according to Seller's specifications and instructions of such Products. In the event such Products are held to infringe such a US patent or copyright in such suit, and the use of such Products in enjoined, or in the case of a compromise or settlement by Seller, Seller shall have the right, at its option and expense, to procure for Buyer the right to continue using such Products, or replace them with non-infringing Products, or modify same to become non-infringing, or grant Buyer a credit for the depreciated value of such Products and accept return of them. In the event of the foregoing, Seller may also, at its option, cancel the agreement as to future deliveries of such Products without liability.

7. SPECIAL TOOLING - Not withstanding any tool, die or pattern charges, all tooling and related items shall be and remain the property of Seller.

8. SHIPMENT AND DELIVERY - Shipments are made F.O.B. Seller's shipping point. Risk of loss of damage and responsibility shall pass from Seller to Buyer upon delivery to and receipt by carrier. Any claim for shortages or damages suffered in transit are the responsibility of Buyer and shall be submitted by Buyer directly to the carrier. Shortages or damages must be acknowledged and signed for at the time of delivery. While Seller will use all reasonable commercial efforts to maintain the delivery date(s) acknowledged or quoted by Seller, all shipping dates are approximate and not guaranteed. Seller reserves the right to make partial shipments. Seller, at its option, shall not be bound to tender delivery of any Products for which Buyer has not provided shipping instructions. If the shipment of the Products is postponed or delayed by Buyer for any reason, Buyer agrees to reimburse Seller for any and all storage costs and other additional expenses resulting therefrom.

9. TERMS OF PAYMENT - Unless otherwise specified by Seller, terms are net thirty (30) days from date of Seller's invoice in US currency. Seller shall have the right, among other remedies, either to terminate this agreement or to suspend further performance under this and/or other agreements with Buyer in the event Buyer fails to make any payment when due, which other agreements Buyer and Seller hereby amend accordingly. Buyer shall be liable for all expenses, including attorney's fees, relating to the collection of past due amounts. Should Buyer's financial responsibility become unsatisfactory to Seller, cash payments or security satisfactory to Seller may be required by Seller for future deliveries and for the Products theretofore delivered. If such cash payment or security is not provided, in addition to Seller's other rights and remedies, Seller may discontinue deliveries.

10. RETURNS AND CANCELLATIONS - In the event Buyer desires to return Products, prior written approval of an authorized representative of Seller at Seller's home office located at Pittsburgh, Pennsylvania is required. In the event of approval of a return request, (I) any allowed outgoing prepaid freight costs will apply, (ii) all returns must be shipped freight prepaid at Buyer's expense, and (iii) Buyer must pay Seller's return and restocking charge. Buyer may cancel orders only upon reasonable advance written notice and upon Seller's approval and payment to Seller of Seller's cancellation charges which include, among other things, all costs and expenses incurred, and, to cover commitments made, by the Seller and a reasonable profit thereon. Seller's determination of such cancellation charges shall be conclusive.

11. GENERAL PROVISIONS - These terms and conditions supersede all other communications, negotiations and prior oral or written statements regarding the subject matter of these terms and conditions. No change, modification, rescission, discharge, abandonment, or waiver of these terms and conditions shall be binding upon the Seller unless made in writing and signed on its behalf by a duly authorized representative of Seller. No conditions, usage of trade, course of dealing or performance, understanding or agreement purporting to modify, vary, explain, or supplement these terms and conditions shall be binding unless hereafter made in writing and signed by the party to be bound, and no modification or additional terms shall be applicable to this agreement by Seller's receipt, acknowledgment, or acceptance of purchase orders, shipping instruction forms, or other documentation containing terms at variance with or in addition to those set forth herein. No waiver by either party with respect to any breach or default or of any right or remedy, and no course of dealing, shall be deemed to constitute a continuing waiver of any other breach or default or of any other right or remedy, unless such waiver be expressed in writing and signed by the party to be bound. All typographical or clerical errors made by Seller in any quotation, acknowledgment or publication are subject to correction.

The validity, performance, and all other matters relating to the interpretation and effect of this agreement shall be governed by the law of the state of Delaware. Buyer and Seller agree that the proper venue for allocations arising in connection herewith shall be only in Delaware and the parties agree to submit to such jurisdiction. No action, regardless of form, arising out of transactions relating to this contract, may be brought by either party more than two (2) years after the cause of action has accrued.

General Information

The facts and the recommendations made in this publication are based on our own research and the research of others, and are believed to be accurate.

We cannot anticipate all conditions under which this information and our products, or the products of other manufacturers in combination with our products, may be used. We reserve the right to change materials or methods without prior notice. We accept no responsibility for results obtained by the application of this information or the safety and suitability of our products, either alone or in combination with other products. Users are advised to make their own tests to determine the safety and suitability of each such product or product combination for their own purposes.

Trademark Registration Acknowledgements

Trademark	Property of
Alumel®	Hoskins Manufacturing Company
Chromel®	Hoskins Manufacturing Company
Chromalox®	Chromalox, Inc.
ChromaSoft®	Chromalox, Inc.
ChromaStar™	Chromalox, Inc.
ChromaTrace™	Chromalox, Inc.
Constantan®	Hoskins Manufacturing Company
Dowtherm®	Dow Chemical Company
FastShip™	Chromalox, Inc.
Fiberglas®	Owens-Corning Corporation
Finstrip®	Chromalox, Inc.
Hastelloy®	Haynes International, Inc.
INCOLOY®	INCO Alloys International, Inc.
INCONEL®	INCO Alloys International, Inc.
IntelliTherm™	Chromalox, Inc.
IntelliTrace™	Chromalox, Inc.
Kapton®	E.I. DuPont de Nemours & Company
Metaray®	Chromalox, Inc.
Microtherm®	Chromalox, Inc.
MONEL®	INCO Alloys International, Inc.
Neoflon®	Sumimoto
Rapid-Trace®	Chromalox, Inc.
Ryton®	Phillips Petroleum Company
Teflon®	El DuPont de Nemours & Company
Therminol®	Monsanto Company
U-RAD®	Chromalox, Inc.
VersaTherm®	Chromalox, Inc.

Chromalox warrants only that the Products and parts manufactured by Chromalox, when shipped, and the work performed by Chromalox when performed, will meet all applicable specification and other specific product and work requirements (including those of performance), if any, and will be free from defects in material and workmanship under normal conditions of use. All claims for defective or nonconforming (both hereinafter called defective) Products, parts or work under this warranty must be made in writing immediately upon discovery, and in any event, with one (1) year from delivery, provided, however all claims for defective Products and parts must be made in writing no later than eighteen (18) months after shipment by Chromalox. Defective and nonconforming items must be held for Chromalox' inspections and returned to the original f.o.b. point upon request. THE FOREGOING IS EXPRESSLY IN LIEU OF ALL OTHER WARRANTIES WHATSOEVER, EXPRESS, IMPLIED AND STATUTORY, INCLUDING, WITHOUT LIMITATION, THE IMPLIED WARRANTIES OF MERCHANTABILITY AND FITNESS FOR A PARTICULAR PURPOSE.

Notwithstanding the provisions of this WARRANT AND LIMITATION Clause, it is specifically understood that Products and parts not manufactured and work not performed by Chromalox are warranted only to the extent and in the manner that the same are warranted to Chromalox by Chromalox' vendors, and then only to the extent that Chromalox is reasonably able to enforce such warranty, it being understood Chromalox shall have no obligation to initiate litigation unless Buyer undertakes to pay all cost and expenses therefore, including but not limited to attorney's fees, and indemnifies Chromalox against any liability to Chromalox' vendors arising out of such litigation.

Upon Buyer's submission of a claim as provided above and its substantiation. Chromalox shall at its option either (i) repair or replace its Products, parts or work at the original f.o.b. point of delivery, or (ii) refund an equitable portion of the purchase price.

THE FOREGOING IS CHROMALOX' ONLY OBLIGATION AND BUYER'S EXCLUSIVE REMEDY FOR BREACH OF WARRANTY, AND IS BUYER'S EXCLUSIVE REMEDY AGAINST CHROMALOX FOR ALL CLAIMS ARISING HEREUNDER OR RELATING HERETO WHETHER SUCH CLAIMS ARE BASED ON BREACH OF CONTRACT, TORT (INCLUDING NEGLIGENCE AND STRICT LIABILITY) OR OTHER THEORIES. BUYER'S FAILURE TO SUBMIT A CLAIM AS PROVIDED ABOVE SHALL SPECIFICALLY WAIVE ALL CLAIMS FOR DAMAGES OR OTHER RELIEF, INCLUDING BUT NOT LIMITED TO CLAIMS BASED ON LATENT DEFECTS. IN NO EVENT SHALL BUYER BE ENTITLED TO INCIDENTAL OR CONSEQUENTIAL DAMAGES AND BUYER SHALL HOLD CHROMALOX HARMLESS THEREFROM. ANY ACTION BY BUYER ARISING HEREUNDER OR RELATING HERETO, WHETHER BASED ON BREACH OF CONTRACT, TORT (INCLUDING NEGLIGENCE AND STRICT LIABILITY) OR OTHER THEORIES, MUST BE COMMENCED WITHIN ONE (1) YEAR AFTER THE DATE OF SHIPMENT OR IT SHALL BE BARRED.

W2008M

Index

Model Number	Description	Page #
APS-4	Automatic Snow and Ice Melting System Controller	111
B100 & E100	Freeze Protection Thermostats	142
CAF-6	Draft Barrier Convection Heater	55
CAF-12	Square Top Convection Heater	61
CAF-20	Cabinet Convection Heater	63
CCAS-8	Slope Top Convection Heater	57
CCAS-12	Slope Top Convection Heater	59
CCH	Cabinet Console Blower Heater	38
CEP-15	Explosion Proof Convection Heater - Dual Elements	54
CIT-1	Snow Sensor	114
CPHH	Pump House Convection Heater	48
CVEP	Explosion Proof Blower Heater	50
CWM	Constant Wattage Medium Temperature Cable	89
CXH-A	Explosion Proof Blower Heater for Hazardous Locations	27
DL	Integrated Connection Accessories	123
DL	Integrated Temperature Controls	135
DL & EL	Connection Accessories	122
DL & EL	General Application Accessories	129
DRA	Portable Salamander Blower Heater	34
Edge-Cutter	Roof De-Icing System	109
EL	Standard Connection Accessories	127
EH	Convection Heater Without Thermostat	45
FPAS	Freeze Protection Heat Trace Panel	154
FPASM	Freeze Protection Heat Trace Panel	154
FPEP	Explosion Proof Convection Heater - Single Element	54
FPLS	Freeze Protection Heat Trace Panel	154
FPLSM	Freeze Protection Heat Trace Panel	154
GIT-4	Gutter Ice Melting Controller	113
H	Horizontal Convection Heater	46
HCH	Wall Mounted Convection Heater	42
HD3D	Hose Down Corosion Resistant Blower Heater	24
HF	Portable Space Blower Heater	37
HL	Hazardous Location Connection Kits	130
HSRL	Self-Regulating Low Temperature Cable	96
HSRM	Self-Regulating Medium Temperture Cable	99
HTAS	Heat Trace Multi-Loop Ambient Sensing Control Panels	150
HTLS	Heat Trace Dual-Loop Line Sensing Control Panel	140
HTLS	Heat Trace Four-Loop Line Sensing Control Panels	143
HTLS	Heat Trace Single-Loop Line Sensing Control Panel	138
HTLS	Heat Trace Three-Loop Line Sensing Control Panels	142
HTLSC1D2	Series C1D2 Heat Trace Line Sensing Control Panels	144
HVH	Horizontal or Vertical Unit Blower Heater	5
HVT	Convection Heater With Thermostat	45

Index *(cont'd)*

Model Number	Description	Page #
IBG	Flexible Thermal Drum Insulation Blanket Heater	165
ICH	Institutional Convection Heater	49
KR	Fixed Single Element Radiant Heater	77
KUH	Horizontal Blower Heater	11
LCD-1	Snow Switch	115
LUH	Horizontal Blower Heater	1
MI	Mineral Insulated High Temperature Cable	92
PHD & PHDT	Heavy Duty Fiberglas® Woven Drum Heater	164
RBC-1	Overhead Radiant Space Heater	71
RBC-3	Fixed Overhead Radiant Heater	73
RCU-1	Remote Control Unit	117
RBF	Heat Trace or Pipe Sensor	130
SC-40	Satellite Contactor	112
SIT-6E	Pavement Sensor	116
SKR	Fixed Single Element Radiant Heater	76
SL-B	Silicone Rubber Insulated Enclosure & Air Heater	166
SLDH	Silicone Rubber Insulated Drum Heater	167
SRF	Self-Regulating Freeze Protection Cable & Accessories	102
SRF-RG	Self-Regulating Roof & Gutter Cable & Accessories	107
SRL	Self-Regulating Low Temperature Cable	83
SRM/E	Self-Regulating Medium Temperature Cable	86
STAR	ChromaStar Infra-Red Radiant Heaters	65
U Series	Heat Trace Connection System Accessories	118
UB	High Capacity Horizontal Blower Heater	15
UTUA-LT	.430" Dia. Round Cross- Section Tubular Replacement Element	75
V	Vertical Convection Heater	47
VUH	Vertical Delivery Blower Heater	20
WCRT	Wall Thermostat	82
WR-80 / WR-90	Wall Thermostat	78
WR-80EP	Wall Thermostat	79
WT	Wall Thermostat - Line Voltage	80
WTL	Wall Thermostat - Low Voltage	81

Chromalox®
PRECISION HEAT AND CONTROL

103 Gamma Drive
Pittsburgh, PA 15238
Phone: (412) 967-3800
Fax: (412) 967-5148

1-800-443-2640
www.chromalox.com

Chromalox - UK
Eltron House
20-28 Whitehorse Road
Croydon, Surrey, CR9 2NA, UK

Tel: +44 (0)20 8665 8900
Fax: +44 (0)20 8689 0571

email: uksales@chromalox.com
www.chromalox.co.uk

Chromalox - France
Route de Château-Thierry
Noyant et Aconin
F-02203 SOISSONS Cedex, France

Tel: +33 (0)3 23 74 39 39
Fax: +33 (0)3 23 74 39 00

email: be.etirexchromalox@wanadoo.fr
www.chromalox.fr

© 2007 Chromalox, Inc.

CWPC-2007