Dual-Window Sight Flow Indicators

In high traffic or confined areas add protection to your pipeline system...

Dual-Window Sight Flow Indicators provide two glass discs on each side, so that if either glass should fail for any reason, the other window can temporarily withstand pressures until the unit can be repaired or replaced. Dual-Window Sight Flow Indicators and Factory Mutual System Approved Dual-Window Sight Flow Indicators are available in 150# NPT Models and 150# and 300# Flanged Models.

Models

150# NPT Dual-Window
DWF .....Plain Dual-Window NPT SFI
DWFF .....Dual-Window NPT SFI (Flapper)
DWFR.....Dual-Window NPT SFI (Rotator)
DWFD.....Dual-Window NPT SFI (Drip Tube)
DWFG .....Dual-Window NPT SFI (Gaseous)

150# Flanged Dual-Window
DWF-F.....Plain Dual-Window Flanged NPT SFI
DWFF-F.....Dual-Window NPT SFI Flanged (Flapper)
DWFR-F .....Dual-Window NPT SFI Flanged (Rotator)
DWFD-F .....Dual-Window NPT SFI Flanged (Drip Tube)
DWFG-F .....Dual-Window NPT SFI Flanged (Gaseous)

300# Flanged Dual-Window
DWM - F.....Plain Dual-Window Flanged NPT SFI
DWMF - F.....Dual-Window NPT SFI Flanged (Flapper)
DWMR-F .....Dual-Window NPT SFI Flanged (Rotator)
DWMD-F .....Dual-Window NPT SFI Flanged (Drip Tube)
DWMG-F .....Dual-Window NPT SFI Flanged (Gaseous)

Dual windows are comprised of two glass discs held in position by a metallic housing, internal shims and gaskets (pictured above).

150# flanged

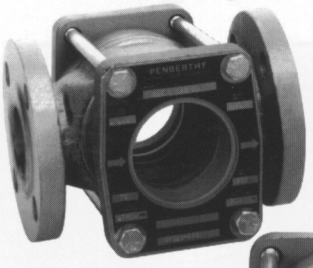

300# flanged

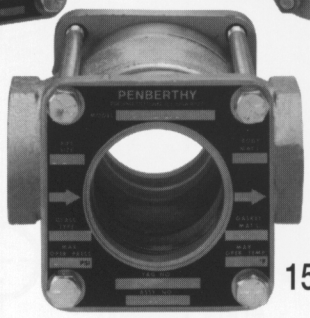

150# NPT

Dual Window

Factory Mutual System Approved

The double, tempered glass window design provides added protection in applications where there is:

External mechanical impact - if the outer glass is cracked or shattered, the inner glass can temporarily continue in service until the unit can be repaired or replaced.

Abnormal compressive forces - in maintenance or replacement situations, the housing assists in alignment of the glass and can absorb uneven or excessive compression.

Thermal shock - in high temperature applications the inner and outer glass protect one another from an extreme thermal gradient. The air pocket between the glass provides an insulative effect.

Corrosion/erosion - if the inner glass is weakened and it breaks, the outer glass can temporarily contain the fluid, withstand the pressure, and continue in service until the unit can be repaired or replaced.

Materials of Construction for FM-Approved Dual-Window Bodies

Standard:
ASTM A126 Steel Gr WCB
ASTM A351/A296 316 STS Gr CF8M
ASTM A473 Alloy 20 CN7M

Optional:
ASTM 494 Monel Gr M-35-1
ASTM A494 Hastelloy C CW12MW

Gaskets:
Grafoil®
Nobestos®
Asbestos

Materials of Construction for Dual-Window 150 PSIG NPT or Flanged Body

Standard:
ASTM A126 Iron Class B
ASTM B62 Bronze Alloy 836
ASTM A216 Steel Gr WCB*
ASTM A351/A296 316 STS Gr CF8M*

Optional:
ASTM 494 Monel Gr M-35-1
ASTM A494 Hastelloy C CW12MW*
ASTM A743 Alloy 20 CN7M*
Consult Factory and pg 20 for other materials/ components
**Materials of Construction for Dual-Window 300# Flanged Body*

INSTRUMENTS • CONTROLS • VALVES
CLICK TO VISIT OUR WEBSITE
ARCO Engineering, Inc.
SINCE 1954
www.arcoengineering.com
3317 Gilmore Industrial Blvd.
Louisville, KY 40213
Ph: (502) 966-3134
Fx: (502) 966-3135

Specifications subject to change without notice.

150# NPT

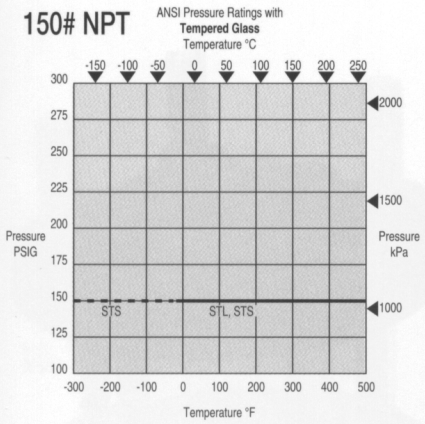

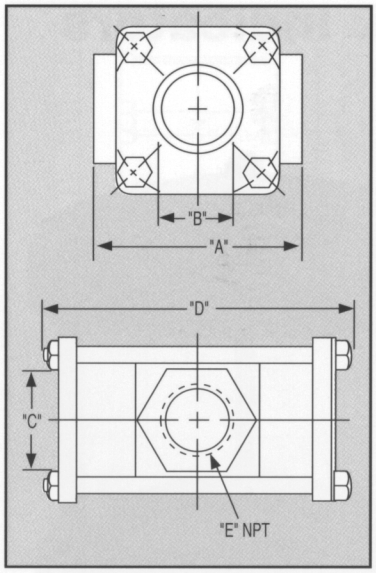

150# NPT Dimensions

UNIT SIZE	DIMENSIONS IN INCHES & (CM)				
	"A"*	"B"	"C"	"D"	"E"
1/4	3 (7.6)	7/8 (2.2)	1 (2.5)	3-7/8 (9.8)	1/4 (0.6)
3/8	3 (7.6)	7/8 (2.2)	1 (2.5)	3-7/8 (9.8)	3/8 (1.0)
1/2	3-3/4 (9.5)	1-1/4 (3.2)	1-1/2 (3.8)	4 (10.0)	1/2 (1.3)
3/4	3-3/4 (9.5)	1-1/4 (3.2)	1-1/2 (3.8)	4 (10.0)	3/4 (1.9)
1	4-1/4 (10.8)	1-1/2 (3.8)	2 (5.1)	5-1/4 (13.1)	1 (2.5)
1-1/4	5-1/2 (14.0)	2-3/8 (6.0)	2-1/2 (6.4)	6-1/2 (16.3)	1-1/4 (3.2)
1-1/2	5-1/2 (14.0)	2-3/8 (6)	2-1/2 (6.4)	6-1/2 (16.3)	1-1/2 (3.8)
2	6-1/4 (15.9)	2-7/8 (7.3)	3-1/4 (8.3)	8-1/2 (21.3)	2 (5.1)
2-1/2	8-1/2 (21.6)	3-3/4 (9.5)	4-1/8 (10.5)	10-3/4 (27.3)	2-1/2 (6.4)
3	8-1/2 (21.6)	3-3/4 (9.5)	4-1/8 (10.5)	10-3/4 (27.3)	3 (7.6)

150#Flanged

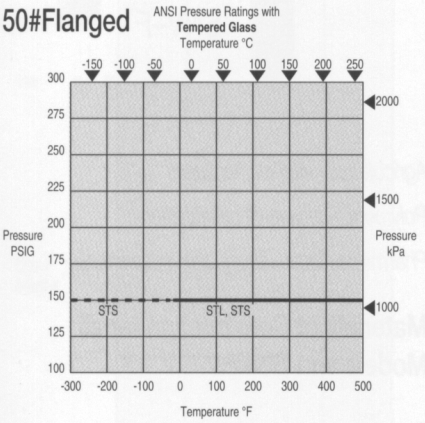

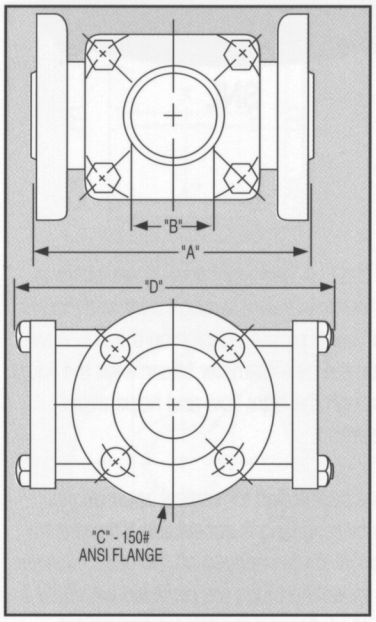

150# Flanged Dimensions

UNIT SIZE	DIMENSIONS IN INCHES & (CM)			
	"A"	"B"	"C"	"D"
1/2	4-5/8 (11.7)	1-1/4 (3.2)	1/2 (1.3)	4-11/16 (11.9)
3/4	4-5/8 (11.7)	1-1/4 (3.2)	3/4 (1.9)	4-11/16 (11.9)
1	5-5/8 (14.3)	1-1/2 (3.8)	1 (2.5)	5-3/4 (14.6)
1-1/4	6-1/2 (16.5)	2-3/8 (6.0)	1-1/4 (3.8)	7-1/4 (18.4)
1-1/2	6-1/2 (16.5)	2-3/8 (6.0)	1-1/2 (3.8)	7-1/4 (18.4)
2	7-7/8 (20.0)	2-7/8 (7.3)	2 (5.1)	9-5/16 (23.7)
2-1/2	9-3/8 (23.8)	3-3/4 (9.5)	2-1/2 (6.4)	11-15/16 (30.3)
3	9-3/8 (23.8)	3-3/4 (9.5)	3 (7.6)	11-15/16 (30.3)
4	11 (27.9)	4-3/4 (12.1)	4 (10.2)	11-5/8 (29.2)
6	14-1/4 (36.2)	7 (17.8)	6 (15.2)	18 (45.0)
8	16-1/8 (41.0)	9 (22.9)	8 (20.3)	21 (52.5)

300# Flanged

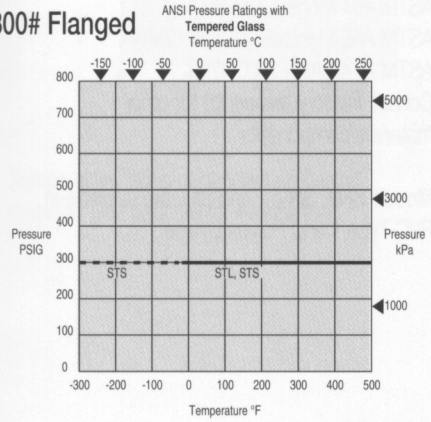

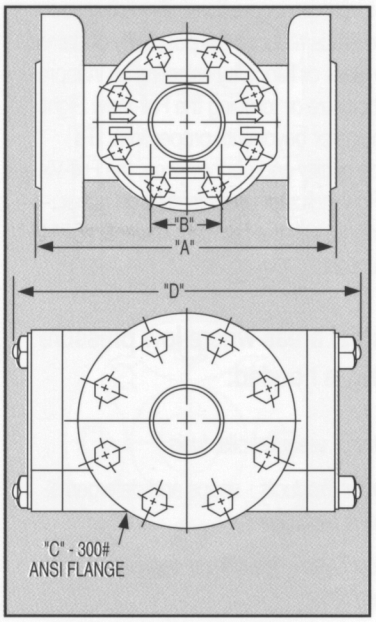

300# Flanged Dimensions

UNIT SIZE	DIMENSIONS IN INCHES & (CM)			
	"A"	"B"	"C"	"D"
1/2	5-7/8 (14.9)	1-1/4 (3.2)	1/2 (1.3)	5-1/4 (13.3)
3/4	5-7/8 (14.9)	1-1/4 (3.2)	3/4 (1.9)	5-1/4 (13.3)
1	6-7/8 (17.5)	1-3/8 (3.5)	1 (2.5)	6-7/16 (16.4)
1-1/4	7-1/2 (19.1)	2 (5.1)	1-1/4 (3.2)	8-1/8 (20.6)
1-1/2	7-1/2 (19.1)	2 (5.1)	1-1/2 (3.8)	8-1/8 (20.6)
2	8-5/8 (21.9)	2-1/8 (5.4)	2 (5.1)	9-5/8 (24.5)
2-1/2	11-3/8 (28.9)	3-3/16 (8.1)	2-1/2 (6.4)	13-3/8 (34.0)
3	11-3/8 (28.9)	3-3/16 (8.1)	3 (7.6)	13-3/8 (34.0)
4	13-1/4 (33.7)	4-1/4 (10.8)	4 (10.2)	16-1/2 (41.9)
6	21-3/8 (54.3)	6-1/4 (15.9)	6 (15.2)	23-3/4 (60.3)
8	22-3/8 (56.8)	6-1/4 (15.9)	8 (20.3)	23-3/4 (60.3)

Specifications subject to change without notice.