INSTRUMENTS • CONTROLS • VALVES
CLICK TO VISIT OUR WEBSITE
ARCO Engineering, Inc.
SINCE 1954
www.arcoengineering.com
3317 Gilmore Industrial Blvd.
Louisville, KY 40213
Ph: (502) 966-3134
Fx: (502) 966-3135

Section 1000
Bulletin 1410
Issued 12/92
Replaces 4/91

Tank Mixing Eductors (TME) PENBERTHY

Simple, economical and reliable tank mixing...

Features:	Benefits of ownership:
■ Proven eductor design	Simple to install and operate; reliable; cost-efficient; powerful
■ Glass-filled polypropylene construction	Lightweight yet strong; corrosion-resistant; low electrical conductivity
■ 3/8", 3/4", and 1-1/2" sizes	Meets a broad range of capacity requirements
■ Built by Penberthy, industry's leading eductor manufacturer for 100 years	Application expertise and support services through a distribution network that knows your industry

Penberthy Tank Mixing Eductors (TMEs) offer an inexpensive, yet highly effective way to improve the circulation and agitation of liquids in tanks. They have no moving parts and require little or no maintenance. In agrichemical storage tanks, the TME can often be used effectively utilizing the existing transfer pump. No additional motors or gear boxes are necessary. In all cases, the TME's "multiplying effect" on fluid flow allows the use of a much smaller pump with greatly improved agitation and circulation in the tank. These benefits, together with durable, lightweight, and abrasion/corrosion-resistant glass-filled polypropylene construction, make TMEs ideal for two applications in particular:

1) Electrocoat and pretreatment tanks, to eliminate settling, to improve surface preparation with enhanced flow over metal, and to suspend sludge for better filtration. The TME provides the low electrical conductivity and smooth flow characteristics long-sought by E-coat operators.

2) Agricultural fertilizer and agrichemical tanks, to thoroughly agitate the solutions and maintain uniform liquid characteristics throughout the tank. TME offers users a lightweight, low maintenance, and inexpensive alternative to mechanical methods.

Agitation application considerations

1) Turnover rate. Turnover rate desired determines the motive flow rate required. Turnover rate as it applies to the TME is the time necessary to move the entire tank contents one time. In a 60,000 gallon tank for example, with a required turnover rate of once per hour it would be necessary to move 1,000 gallons per minute. Each TME can mix four gallons of tank contents for every motive gallon passing through the TME, so the volume of fluid discharged is five times greater than the volume of motive fluid entering the TME inlet. Thus, the amount of motive fluid required for the 60,000 gallon tank would only be 200 gallons per minute to achieve the desired turnover rate. Refer to the Capabilities Table on page 4 to match TME sizes and capacities with the application.

2) Tank contents. Contents influence TME application as follows:

Contents	Desired Results	# of TMEs required
Only liquid(s)	Effectively agitate, and achieve homogeneity	Usually requires only one TME
Suspended Solids	Maintain suspension	Usually requires only one TME
	Sweep solids off bottom	Multiple TMEs

3) Discharge plume. Significant agitation occurs in the plume exiting the TME. The plume is

How TME works. A predetermined amount of liquid, called motive or operating fluid, is pumped to the TME which is submerged inside the tank. In agricultural applications frequently only one TME is used. In electrocoat and pretreatment several TMEs are usually fed from one header. As the motive fluid leaves the nozzle of the TME, it entrains material in the tank. The motive fluid and the entrained material are thoroughly mixed inside the parallel section of the TME before being discharged. The discharge flow, or plume, continues the mixing, agitation and circulation of the liquid throughout the tank.

One gallon pumped...

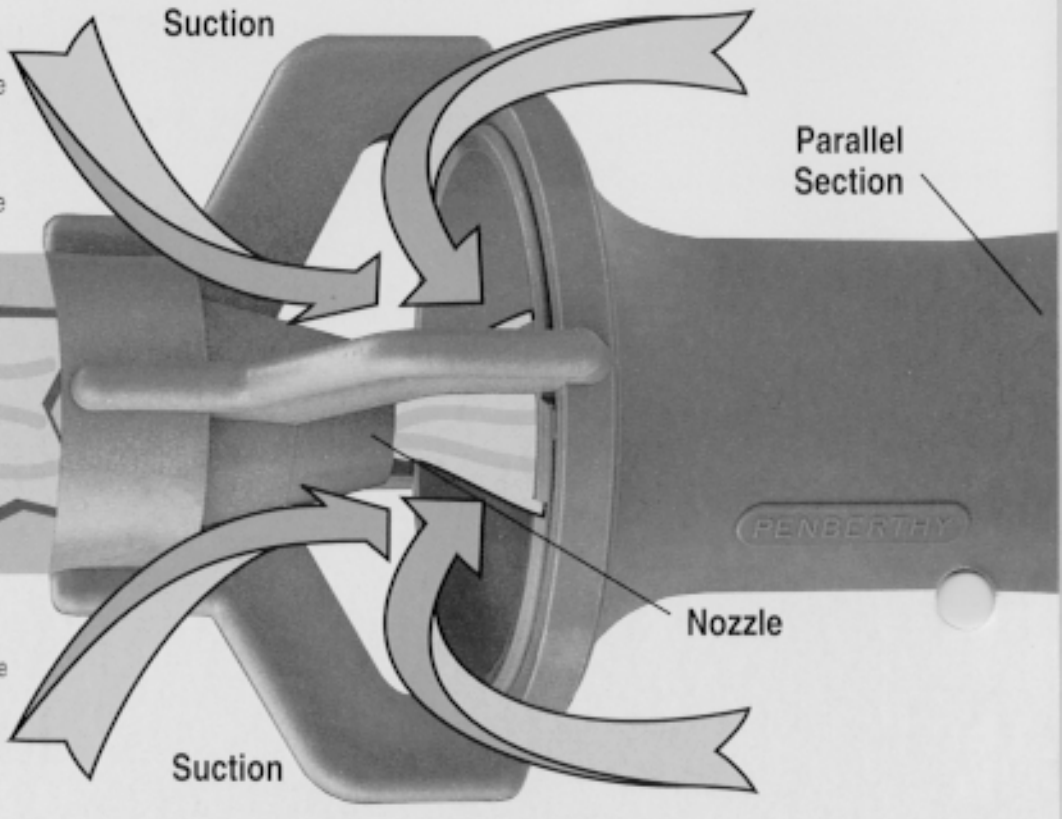

...It's as easy as TME.

And it's from Penberthy, industry's leader in eductor technology for over 100 years

Electrocoat

Side view section

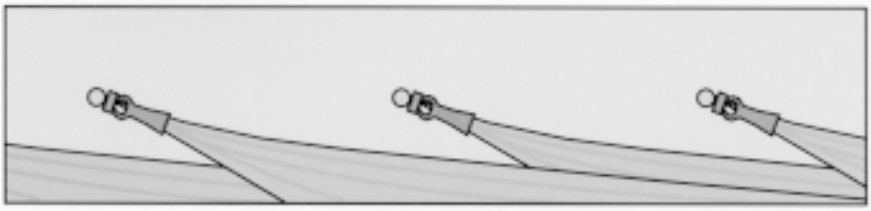

Top view section

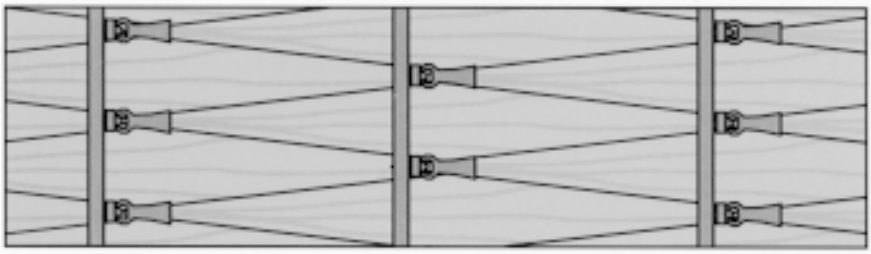

(Left) E-coat application illustration shows a configuration of TMEs angled slightly downward and completely sweeping the bottom of the tank. The effective plume length is 1/2 foot for every PSI of differential pressure. If the three headers are five feet apart, and the △P is 20 PSI, with the plume dispersion angle 11°, then the TMEs should be positioned so that the plumes completely cover the bottom of the tank at 10 ft.

(Below) In agricultural applications, frequently only one TME is used. A second TME can be added to sweep the bottom if there is a tendency to settle.

Agrichemical

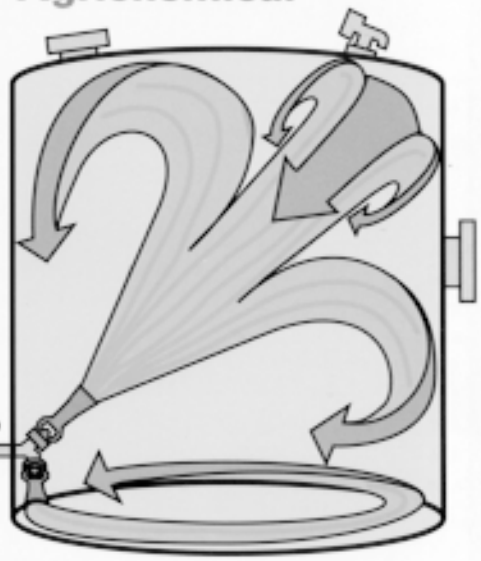

cone-shaped from the TME discharge diverging at an 11° angle. The plume length needed to achieve effective agitation can be calculated as follows:

Plume length varies with differential pressure (△P) across the TME. Multiply △P:

Tank Contents	*in PSI by*	*in kPa 23 by*
Containing only liquid(s)	1 ft.	1 meter
To maintain solids in suspension	1 ft.	1 meter
To sweep solids off the tank bottom	1/2 ft.	1/2 meter

4) Plume positioning. ***To agitate*** with liquid(s) only or liquids with solids in suspension direct the plume from the bottom of one side of the tank toward the highest likely liquid level on the farthest point from the TME. The △P should be sufficient to create a plume that reaches that point.

To sweep solids from the tank bottom. Direct the TME plume to contact every point on the tank bottom with particular attention to the angular intersections where tank bottom and sides are joined.

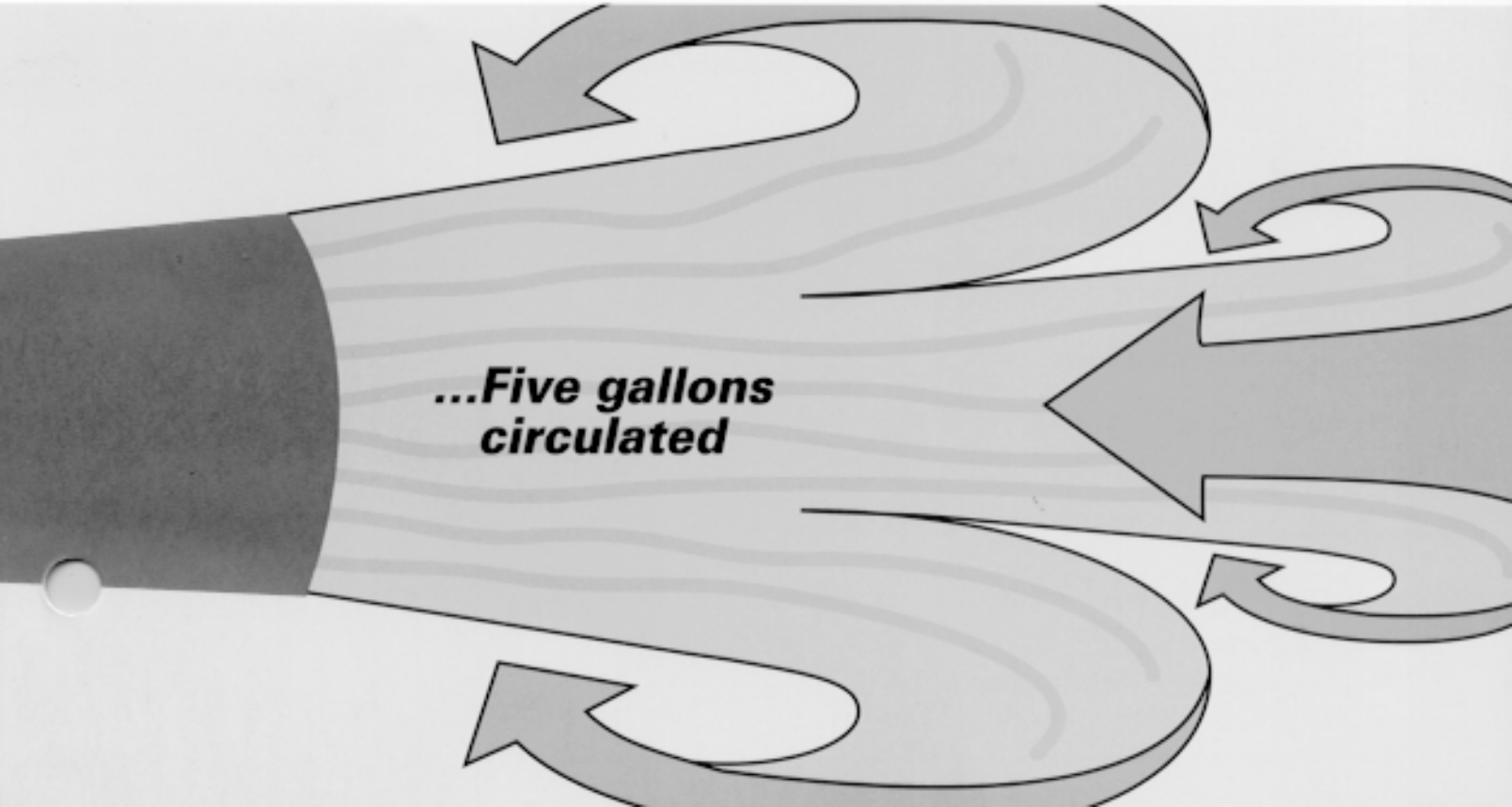

Specifications...

Nominal Capabilities—Differential Pressure

	3/8" GPM (m^3/hour)		3/4" GPM (m^3/hour)		1-1/2" GPM (m^3/hour)	
PSID (kPaD)*	*Motive*	*Discharge*	*Motive*	*Discharge*	*Motive*	*Discharge*
10 (68.93)	7.3 (1.67)	36.5 (8.35)	13.7 (3.12)	69 (15.60)	34 (7.74)	170 (38.70)
15 (103.39)	9.0 (2.04)	45.0 (10.20)	16.8 (3.82)	84 (19.10)	42 (9.48)	210 (47.40)
20 (137.86)	10.4 (2.36)	52.0 (11.75)	19.4 (4.41)	97 (22.05)	48 (10.95)	240 (54.75)
25 (172.32)	11.6 (2.63)	58.0 (13.15)	21.7 (4.93)	109 (24.65)	54 (12.25)	270 (61.25)
30 (206.79)	12.7 (2.89)	63.5 (14.45)	23.8 (5.40)	119 (27.00)	59 (13.41)	295 (67.05)
35 (241.25)	13.7 (3.12)	68.5 (15.60)	26.7 (6.06)	133 (30.30)	64 (14.49)	320 (72.45)
40 (275.71)	14.7 (3.33)	73.5 (16.65)	27.5 (6.23)	137 (31.15)	68 (15.49)	340 (77.45)
45 (310.18)	15.6 (3.54)	78.0 (17.70)	29.1 (6.61)	146 (33.05)	72 (16.43)	360 (82.15)
50 (344.64)	16.4 (3.73)	82.0 (18.65)	30.7 (6.97)	153 (34.85)	76 (17.32)	380 (86.60)

**Differential pressure—TME inlet PSI less tank PSI*

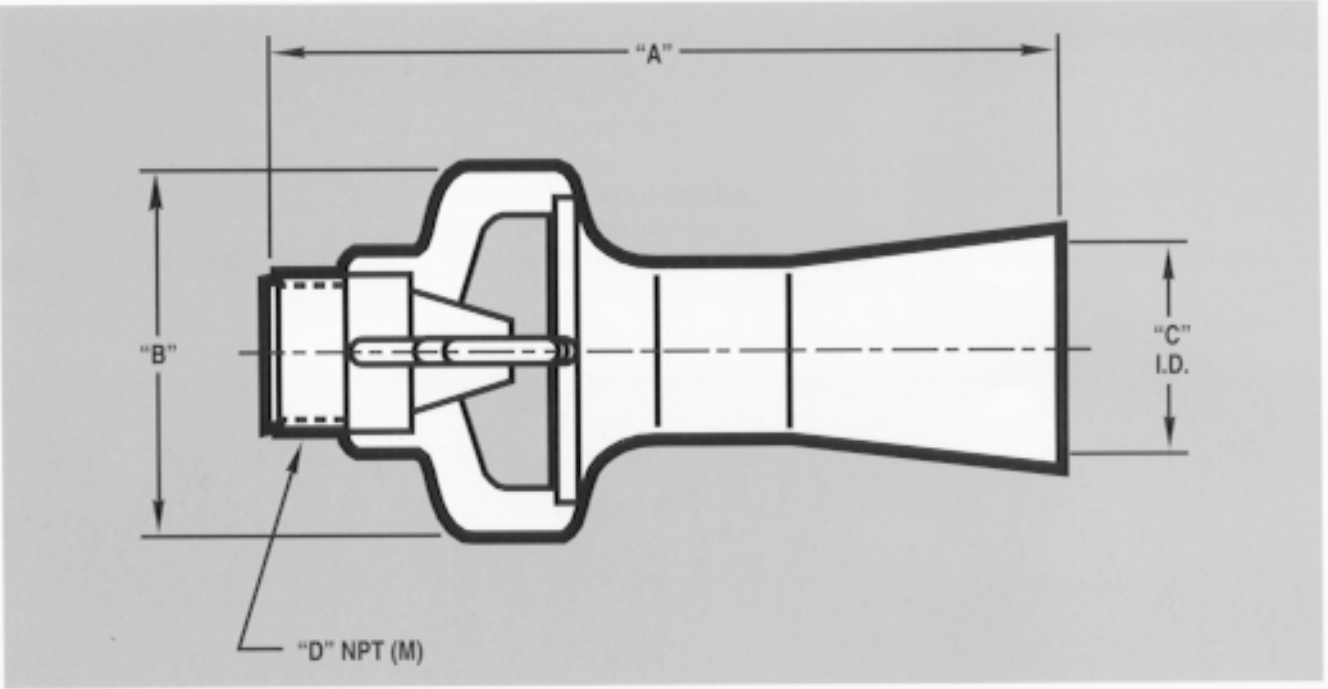

Dimensions

Size *Inches (mm)*	"A"	"B"	"C"	"D"
3/8"	4-1/2" (114.30)	2-1/8" (53.98)	1-1/4" (31.75)	3/8" (9.52)
3/4"	6-3/8" (161.90)	2-7/8" (73.02)	1-5/8" (41.28)	3/4" (19.05)
1-1/2"	9-3/4" (247.60)	4-1/2" (114.30)	2-9/16" (65.09)	1-1/2" (38.10)

PENBERTHY

PENBERTHY, INC.
320 Locust St. • Prophetstown, IL 61277
Tel. (815) 537-2311 • Fax (815) 537-5764

© 1992 PENBERTHY, all rights reserved

INSTRUMENTS • CONTROLS • VALVES
CLICK TO VISIT OUR WEBSITE
ARCO Engineering, Inc.
SINCE 1954
www.arcoengineering.com
3317 Gilmore Industrial Blvd.
Louisville, KY 40213
Ph: (502) 966-3134
Fx: (502) 966-3135